Preface

Thank you for purchasing VD300 Series Inverters!

VD300 is a high-performance vector control inverter developed by VicRuns. Adopting advanced vector control algorithm, it is widely used for asynchronous motor speed control. Through its integrated EMC design and with optimized PWM control technique to meet users' demand on environmental requirement such as low-noise in application places and low EMI. It has perfect anti-tripping control and good adaptive ability to bad power grid, temperature, humidity and dust, in order to satisfy various sophisticated requirement under high precision drive applications, thus to satisfy users expectation of higher reliability and stronger adaptability to environment of their equipment, achieving industry specialization and personalized motor drive and control system solution.

VD300 series high performance vector control inverter has following outstanding features:

1. Various control method

Supporting control method: SVC control mode 0, SVC control mode 1, linear V/F control, parabola V/F control, multi-stage V/F control, V/F separation control.

2. Leading vector control algorithm

Optimized no-speed FVC control has better low speed stability, stronger low frequency load capacity, supporting speed control and torque control.

3. Support multi-function I/O extension and multi-function MFI extension port

Multi-function I/O extension card, multi-function MFI extension port can connect related extension function unit defined by manufacturer.

This manual provides the related issues: user installing and site wiring, quick debug, parameters setting, failure diagnose and eliminate and daily maintenance and correlation matters. Please read this manual to make sure you can install, use and maintain the inverter correctly, then play their superior performance.

Please send this manual to the user or maintainer of this inverter, and properly kept.

Unpacking and Inspection:

Every inverter has been inspected rigorously before shipping.

Please confirm carefully when unpacking the packing carton:

● Check if any damage signs of the product and its package.

● Check if the model and inverter rated values on the nameplate are the same as stated on your order and user manual.

● The box contains the inverter, manufacturer certificate, user manual.

If the product is damaged during transportation, or there is any omission or damage, please contact our company or your local supplier immediately.

First time use suggests:

The users who use this product for the first time shall read this manual carefully. For any doubt on certain functions and performances, please contact the technical support personnel of our company for help, so as to use this product properly. With commitment to the constant improvement of the inverter products, our company may change the information provided without additional notice.

VD300 series inverter is confirmed to below international standard, has passed the CE certification.

IEC/EN 61800-5-1: 2003 adjustable speed electric drive system safety regulation requirements;

IEC/EN 61800-3: 2004 adjustable speed electric drive system: part 3: product EMC standard and its specific test method;

IEC/EN61000-2-1、2-2、3-2、3-3、4-2、4-3、4-4、4-5、4-6；EMC international and EU standard .

Contents

Chapter 1 Safety and Precautions - 1 -
1.1 Safety Definition - 1 -
1.2 Safety Precautions - 1 -
1.3 General Precautions - 3 -
Chapter 2 Product Information - 6 -
2.1 Designation Rules - 6 -
2.2 Nameplate - 6 -
2.3 Inverter Series - 6 -
2.4 Product Specifications - 8 -
2.5 Physical Appearance and Main Structure Diagram - 10 -
2.6 Product Appearance and Installation Dimension - 11 -
2.7 Physical Dimensions Of External Keyboard - 13 -
2.8 Braking Unit Model Selection Guide - 14 -
2.9 Routine Repair and Maintenance of Inverter - 15 -
2.10 Warranty Introduction - 17 -
Chapter 3 Mechanical and Electrical Installation - 18 -
3.1 Installation Environment - 18 -
3.2 The Installation Direction and Space - 18 -
3.3 Removing and Mounting the Cover Plate and Keyboard - 19 -
3.4 Inverter and External Electrical Parts Connection - 20 -
3.5 Standard Wiring Diagram - 25 -
3.6 Main Circuit Terminals - 27 -
3.7 Control Circuit Terminal - 30 -
Chapter 4 Operation and Display - 38 -
4.1 Introduction of Operation and Display Interface - 38 -
4.2 Motor Parameter Self-learning - 40 -
4.3 Password Setting - 41 -
4.4 Parameter Lock (authority lower than password) - 41 -
Chapter 5 Function Parameter Table - 42 -
Chapter 6 Parameter Description - 84 -
6.1 P00 Basic Function - 84 -
6.2 P01 Stop Control Parameter Group - 89 -
6.3 P02 Motor 1 Parameters - 95 -
6.3 P02 Motor 1 Parameters - 95 -
6.4 P03 Motor 1 Vector Control Parameters Group - 96 -
6.5 P04 motor 1 V/F Control Parameters Group - 101 -
6.6 P05 Input Terminals Function Parameter Group - 104 -
6.7 P06 Output Terminal Function Parameter Group - 116 -
6.8 P07 AIAO Correction Group - 122 -
6.9 P08 Process PID Control Parameter Function - 124 -
6.10 P09 Special Function Parameter Group - 130 -
6.11 P10 Keyboard and Display - 139 -
6.12 P11 MS Speed Function And Simple PLC Function - 144 -
6.13 P13 Protection Function Parameters Group - 148 -
6.14 P14 Error Record Parameter Group - 155 -
6.15 P15 Modbus Communication Parameter Group - 157 -
6.16 P20 Motor 2 Parameter Group - 158 -
6.17 P21 Motor 2 V/F Control Parameter Group - 158 -
6.18 P28 Status Monitoring Parameter Group - 159 -
6.19 P29 User Parameter Group - 161 -
Chapter 7 EMC Guide - 162 -
7.1 Definition - 162 -

7.2 EMC Standard Introduction ..... - 162 -
7.3 EMC Guide ..... - 162 -
Chapter 8 Fault Shooting and Solutions ..... - 164 -
8.1 Fault Alarm and Countermeasures ..... - 164 -
8.2 Common Faults and Solutions ..... - 168 -
Chapter 9 Communication Protocol ..... - 169 -
9.1 About Protocol ..... - 169 -
9.2 Application Methods ..... - 169 -
9.3 Bus Structure ..... - 169 -
9.4 Protocol Description ..... - 169 -
9.5 Communication Frame Structure ..... - 169 -
9.6 Command Code and Communication Data Description ..... - 170 -
Appendix A Multi-function I/O Extension Card ..... - 178 -

Chapter 1 Safety and Precautions

1.1 Safety Definition

During the installation, commissioning and maintenance of the system, please make sure to follow the safety and precautions of this chapter. In case of a result of illegal operations, caused any harm and losses is nothing to do with the manufacturer. In this manual, safety precautions are divided to two types below:

DANGER

● Danger arising due to improper operations may cause severe hurt or even death and major property damage.

WARNING

● Danger arising due to improper operations may cause moderate damage or light hurt, and equipment damage or property damage.

1.2 Safety Precautions

1.2.1 Before Installation

DANGER

● Do not install the equipment if you find water seepage, component missing or damage upon unpacking.

● Do not install the equipment if the packing list does not conform to the product you received

DANGER

● Handle the equipment with care during transportation to prevent damage.

● Do not touch the components with your hands. Failure to comply will result in static electricity damage.

1.2.2 During Installation

DANGER

● Install the equipment on incombustible objects such as metal, and keep it away from combustible materials. Failure to comply may result in a fire.

● Install the equipment according to regulations and tighten the fastening bolts. Failure to comply may result in equipment falling.

● Do not loosen the fixed screws of the components, especially the screws with red mark.

WARNING

● Do not drop conductive objects as wire ends or screw into inverter. Failure to comply will result in damages.

● Install inverter in place avoid to vibration, water drops and direct sunlight.

● When two inverters are installed in the same cabinet, arrange the installation positions properly to ensure normal cooling effect, keep the cabinet with good ventilation.

1.2.3 At Wiring

DANGER

● Wiring must be performed only by qualified personnel under instructions described in this manual. Failure to comply may result in unexpected accidents.

● A circuit breaker must be used to isolate the power supply and inverter. Failure to comply may result in a fire.

● Ensure that the power supply is cut off before wiring. Failure to comply may result in electric shock.

● Connect inverter to ground properly by standard. Failure to comply may result in electric shock.

● Do not connect the input power with output terminals U, V, W, confirm the mark on terminal before connection to avoid wrong wiring. Failure to comply can damage the inverter!

● Never connect the braking resistor between the DC bus terminals P+ and P-. Failure to comply may result in a fire.

● The wire size of main circuit should conformed to standard, the wiring should comply with EMC and local safety standard. Failure to comply may result in accidents.

● Use shielded cable for input output control circuit of analog and rapid speed pulse signal, and ensure the shielding layer is reliably grounded.

1.2.4 Before Power-on:

DANGER

● Check that the following requirements are met:

● The voltage class of the power supply is consistent with the rated voltage class of the AC drive.

● The input terminals (R, S, T) and output terminals (U, V, W) are properly connected.

● No short-circuit exists in the peripheral circuit.

● The wiring is secured.

● The external units of inverter and wires are configured under the manual instructed, all matched circuit and wiring are correctly connected.

● Failure to comply will result in damage to inverter!

1.2.5 After Power-on

DANGER

● Do not open the cover after inverter power-on to prevent electric shock.

● Do not touch or operate the inverter with wet hands. Failure to comply will result in electric shock.

● Do not touch any terminal of inverter after power-on, or drag connection cable. Failure to comply will result in equipment damage or electric shock.

● Do not try to check or change the manufacturer parameter. Failure to comply may result in malfunction or damage to inverter!

● Make sure the mechanical equipment is ready to start before inverter run with loading, make sure related staff is in safety zone. Failure to comply will result in damage or personal hurt!

● Please pay attention to hiding accident which may result in personal hurt or property damage while

motor is run, if it is necessary to identify the motor parameter.

1.2.6 During Operation

DANGER

- Do not touch the cooling fan or braking resistor etc, otherwise may cause personal injury!
- Do not do inspection while inverter run, except for professional technician, otherwise may cause inverter damaged or personal injury.

WARNING

- Do not move inverter or the installed cabinet while it is run, keep external objects falling into the device. Failure to comply will result in damage.
- Start/Stop inverter via terminal function or other control method, try not to start inverter via directly power-on control method. Do not use contactor on inverter output terminal to control motor starting or stop.

1.2.7 During Maintenance

DANGER

- Do not repair and maintain the equipment if power is connected. Otherwise there will be danger of electric shock!
- If the LED is still on light on control panel, it is Disabled to disassemble the body in order to avoid electric shock.
- The inverter shall be repaired and maintained only by the qualified person who has received professional training. Otherwise, it may cause personal injury or equipment damage.
- For all the standard equipped or optional accessories, must be dismounted or mounted while the inverter power is disconnected.

1.3 General Precautions

1.3.1 Motor Insulation Inspection

For first time usage, motor is left unused for long time or periodically inspected, insulation inspection must be done to avoid motor coils insulation failure which may result in inverter damage. Disconnect motor and inverter before inspection, 500V voltage type Meg-ohmmeter is recommended. It is up to standard if insulation resist value no less than 5MΩ.

1.3.2 Motor Overheat Protection

If selected motor and inverter rated capacity doesn’t match, especially the inverter rated power larger than motor rated power, it is necessary to adjust the motor protect parameter of inverter into actual used motor parameter. Or a thermal relay can be installed to motor to protect motor.

1.3.3 Run with Power Frequency (under or above)

This inverter can provide 0.00Hz~650.00Hz output frequency, so motor is run at low frequency on long time. Take care of motor cooling or frequency converted motor could be a choice. When motor run with over-limit rate frequency, consider the bearing capacity of mechanic system with high speed, to avoid the shortening of lifespan of equipment.

1.3.4 Vibration and Resonance of Mechanic System

Since inherent property of mechanic system, inverter could have mechanic system resonance point while accelerating or decelerating, by setting inverter jump frequency can avoid mechanic system resonance point. If customer required run frequency is happened to be the same with mechanic resonance frequency, it is necessary to change run frequency or change the inherent resonance

frequency of mechanic system.

1.3.5 Regarding Motor Heating and Noise

Inverter output voltage is PWM wave, with some higher harmonic, so motor temperature rising, noise and vibration should increase a little comparing with power frequency, which is normal.

1.3.6 Pressure Sensing Device on Output Side or Improve Power Factor Capacitor

Inverter output voltage is PWM wave, if output side installed capacitor to improve power factor or pressure sensing device to anti-thunder, it could easily result in instant over current or damage to inverter. Disassemble such devices before inverter installation.

1.3.7 Switchover Device as Contactor Installed on Inverter Input Output Side

If there is a contactor between power supply and inverter input terminal, it is Disabled to use it to start/stop inverter. When it is very necessary to use the contactor to start/stop inverter, the action interval time should not less than 1hr. Since frequent charge/discharge could easily shorten the lifespan of electrolytic capacitor inside inverter. If there is a contactor between motor and inverter output terminal, make sure if motor is static and inverter is without output, then switchover the contactor, failure to comply may damage the inverter.

1.3.8 Applications with Non-rated Voltage

The application voltage range used on inverter should not exceed the regulated voltage on this manual, low voltage or higher voltage can easily damage inverter.

If power is not Enable, then use voltage reduction or voltage rising device to deal with voltage conversion in order to comply with inverter input voltage requirement.

1.3.9 Three-phase Input Change to Two Phase Input

If inverter is 3phase input type, do not use 2phase power supply, otherwise it could result in phase loss protection error even inverter damage.

1.3.10 Lightening Surge Protection

Although there is lightening overvoltage overcurrent device inside inverter, which has certain self-protection function for lightening induction. But for user located in lightening frequent zones, it is necessary to add lightening protection unit in front of inverter, this does good to extend inverter lifespan.

1.3.11 Altitude Level and Voltage Reduction Usage

Place with altitude exceeding 2000M, inverter cooling effect get worse due to air condense reduced, so under-rated usage of inverter is necessary.

1.3.12 Common DC Bus Introduction

In condition of several units of inverter run at the same time, then common DC bus can be adopted to save electricity. This type of inverter support common DC bus, but make sure the power specification of those inverters are very close in advance, otherwise it could damage inverter.

1.3.13 Precaution of Inverter Abandonment

Inverter belongs to electric electronic device, burning disposal will result lots of harmful gas even exploding. Please refer to related national laws and regulations to dispose or abandon.

1.3.14 Regarding Adaptable Motor

① this type inverter standard matching motor is quaternary squirrel-cage asynchronous induction motor or permanent magnet synchronous motor. When the dragging motor is not above type, please refer to motor rated current to select the suitable inverter.

② the cooling fan of general motor and rotor spindle are coaxial connected. While motor rotating speed reducing resulted cooling fan Deceleration proportionally and so making heat dissipation worse. As a conclusion, if motor run at low frequency stage for long time, it is necessary to add a strong exhaust fan or change the motor to variable frequency motor.

③ Inverter default setup has built-in standard parameter for its adaptive motor, but in actual application, it is necessary to identify motor parameter or change its original default setup of motor parameter. Otherwise it will affect operation efficiency and protection performance to motor.

④ Due to cable or motor internal short circuit can result in inverter alarm or even exploding. So

insulation and short circuit test on wiring and motor should be done before connecting and installing motor. If the system has been idled for long time, then a retest should be done to avoid system damage or performance reduce.

Chapter 2 Product Information

2.1 Designation Rules

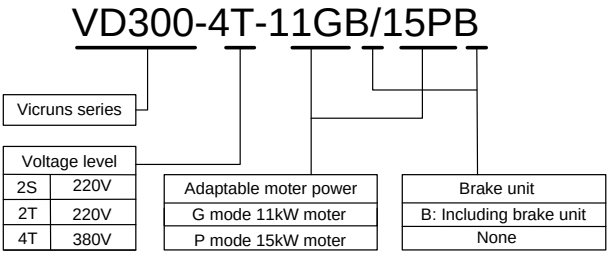

Fig 2.1-1 Designation Rules

2.2 Nameplate

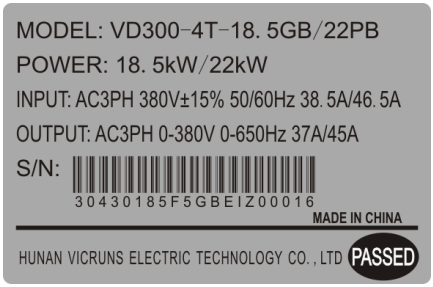

WARNING

● The bar code on inverter nameplate is the only code to recognize its identity, so the bar code is the most important basis for the after sales service.

2.3 Inverter Series

Table 2-1 Product specifications and technical data

Model No.	Power Capacity (kVA)	Rated Input Current (A)	Rated Output Current (A)	Adaptable Motor	
				kW	HP
Single-phase Power supply: 220V，50/60Hz					
VD300-2S-0.7GB	1.5	8.2	4.0	0.75	1
VD300-2S-1.5GB	3.0	14.0	7.0	1.5	2
VD300-2S-2.2GB	4.0	23.0	9.6	2.2	3
VD300-2S-3.7GB	5.9	35.0	17.0	3.7	5
VD300-2S-5.5GB	8.9	50.0	25.0	5.5	7.5

Three-phase Power supply:380V，50/60Hz						
VD300-4T-0.7GB		1.5	3.4	2.5	0.75	1
VD300-4T-1.5GB		3.0	5.0	3.8	1.5	2
VD300-4T-2.2GB		4.0	5.8	5.1	2.2	3
VD300-4T-3.7GB		5.9	10.5	9.0	3.7	5
VD300-4T-5.5GB	VD300-4T-5.5PB	8.9	14.6	13.0	5.5	7.5
VD300-4T-7.5GB	VD300-4T-7.5PB	11.0	20.5	17.0	7.5	10
VD300-4T-11GB	VD300-4T-11PB	17.0	26.0	25.0	11.0	15
VD300-4T-15GB	VD300-4T-15PB	21.0	35.0	32.0	15.0	20
VD300-4T-18.5G	VD300-4T-18.5PB	24.0	38.5	37.0	18.5	25
VD300-4T-22G	VD300-4T-22P	30.0	46.5	45.0	22	30
VD300-4T-30G	VD300-4T-30P	40.0	62.0	60.0	30	40
VD300-4T-37G	VD300-4T-37P	50.0	76.0	75.0	37	50
VD300-4T-45G	VD300-4T-45P	60.0	92.0	91.0	45	60
VD300-4T-55G	VD300-4T-55P	72.0	113.0	112.0	55	70
VD300-4T-75G	VD300-4T-75P	100.0	157.0	150.0	75	100
VD300-4T-90G	VD300-4T-90P	116.0	180.0	176.0	90	110
VD300-4T-110G	VD300-4T-110P	138.0	214.0	210.0	110	150
VD300-4T-132G	VD300-4T-132P	167.0	256.0	253.0	132	175
VD300-4T-160G	VD300-4T-160P	200.0	307.0	304.0	160	210
VD300-4T-185G	VD300-4T-185P	231.0	350.0	326.0	185	240
VD300-4T-200G	VD300-4T-200P	250.0	385.0	377.0	200	260
VD300-4T-220G	VD300-4T-220P	280.0	430.0	426.0	220	300
VD300-4T-250G	VD300-4T-250P	315.0	468.0	465.0	250	350
VD300-4T-280G	VD300-4T-280P	355.0	525.0	520.0	280	370
VD300-4T-315G	VD300-4T-315P	396.0	590.0	585.0	315	500
VD300-4T-355G	VD300-4T-355P	445.0	665.0	650.0	355	420
VD300-4T-400G	VD300-4T-400P	520.0	785.0	725.0	400	530
VD300-4T-450G	VD300-4T-450P	565.0	883.0	820.0	450	600
VD300-4T-500G	VD300-4T-500P	630.0	890.0	860.0	500	660
VD300-4T-560P		700.0	990.0	950	560	750

2.4 Product Specifications

Table 2-2 Product technical specification

Item		Specifications
Power input	Rated input voltage	Grade of rated voltage is 220V or 380V: voltage continued fluctuation±10%, brief fluctuation:-15~+10%, voltage imbalance rated<3%, aberration rate meet IEC61800-2 requirements.
	Rated input current	Refer to table 2-1
	Rated frequency	50/60Hz, fluctuation range ±5%
Power output	Standard adaptive motor	Refer to table 2-1
	Rated capacity	Refer to table 2-1
	Rated current	Refer to table 2-1
	Output voltage	Output three-phase under the rated input condition, 0V~rated input voltage, error is less than±3%.
Main Control Functions	Highest frequency	0Hz~650Hz
	Carrier frequency	1.0KHz~16KHz, auto-adjust carrier frequency.
	Input frequency resolution	0.01Hz(digit setup mode)
	Control mode	SVC control mode 0、SVC control mode 1、linear V/F control, parabola V/F control、multi-stage V/F、V/F separation
	Start torque	0.25Hz/150%(vector control)
	Motor type	asynchronous motor
	Speed range	1: 100
	Speed control accuracy	±0.2%
	Torque control accuracy	5%
	Overload capacity	G type motor: 150% rated current for 60sec; 200% rated current for 1sec. P type motor: 120% rated current for 60sec; 150% rated current for 5sec.
	Torque boost	Auto torque boost, manual torque boost by 0.1%~10.0%.
	Acceleration/down curve	Linear or S curve acceleration/down mode, 4 types of acceleration/down time, range 0.0s~3600.0s.
	DC braking	DC braking frequency: .000Hz~max output frequency, braking time: 0.0s~60.0s, braking current: 0.0%~100.0%.
	Jogging control	Jogging frequency range: 0.00Hz~max output frequency,

		jog Acceleration/down time 0.0s~3600.0s.
	Easy PLC, multi-stage speed run	Via built-in PLC or control terminal can realize max 16stage speed run.
	Built-in PID	Can realize process control conveniently.
	Auto-adjustment of the voltage	Can keep the output voltage constant automatically when the grid voltage changed.
	Current Suppression	When load changes, it limits output current automatically, against over-current tripping.
	Quick Current Suppression Function	Reduce over-current failure on the max extent, and protect normal operation of inverter.
	Dynamic over voltage suppression	When operating frequency changes it can suppress energy feedback automatically, to prevent tripping due to bus overvoltage.
	Oscillation suppression	Optimize V/F oscillation arithmetic, realize V/F steady operation.
Individual Function	Power dip ride through	It ensures that the AC drive continues to run for a short time when an instantaneous power failure or sudden voltage reduction occurs.
	Timing control	Timing control function: setting time range: 0min-65535min.
	Multi-motor switchover	Two motors can be switched over via two groups of motor parameters.
	Support extension	Support multi-function I/O extension card and manufacturer defined MFI port related extension function module.
Operation	Running command source	Operation panel、control terminals、serial communication port, you can perform switchover between these sources in various ways.
	Frequency source	There are a total of 10 frequency sources, such as digital setting, analog voltage setting, analog current setting, pulse setting and serial communication port setting, you can perform switchover between these sources in various ways.
	Auxiliary frequency source	There are ten auxiliary frequency source, it can implement fine tuning of auxiliary frequency and frequency synthesis.
	Input terminal	6 digit terminal input, 1 terminal support rapid pulse input on max 100kHz. 2 analog input terminals；with optional 0/4mA to 20mA current input or 0V to 10V voltage input. Extension capacity: 3 digital input terminals and 1 analog input terminals.
	Output terminal	2 analog output terminals；with optional 0/4mA to 20mA current output or 0V to 10V voltage output. 2 digit output terminals；one supporting 0.01KHz~100KHz square signal rapid pulse output.

		2 relay output terminal Extension capacity: 1 digit output terminal.
Display and Keypad Operation	LED display	Can display 5 parameters
	Protection function	Motor short-circuit detection at power-on, input/output phase loss protection, overcurrent protection, overvoltage protection, undervoltage protection, overheat protection and overload protection etc.
Environment	Installation location	Indoor, free from direct, dust, corrosive gas, combustible gas, oil smoke, vapor, drip or salt etc.
	Altitude level	Lower than 2000m(de-rate if altitude is higher than 2000m).
	Ambient temperature	-10℃-+40℃(de-rate if the ambient temperature is between 40℃ and 50℃).
	Humidity	<95%RH, without condensing..
	Vibration	<5.9m/s2 (0.6g)
	Storage temperature	-20℃- +60℃
Protection grade		IP20
Cooling method		Forced air cooling

2.5 Physical Appearance and Main Structure Diagram

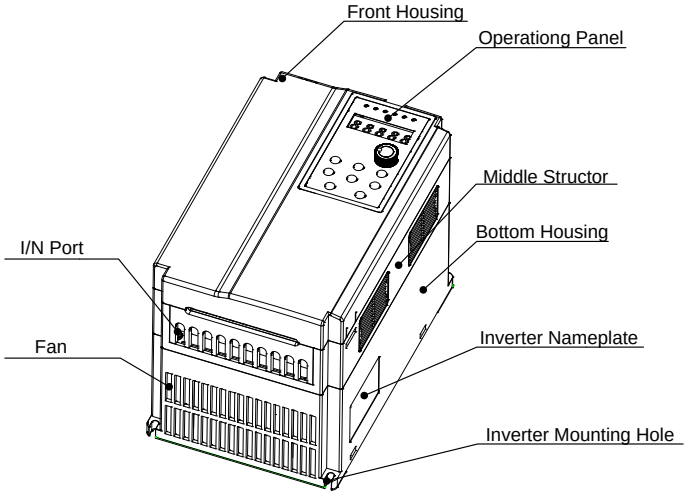

Fig.2.5-1 Physical Appearance and Main structure diagram

2.6 Product Appearance and Installation Dimension

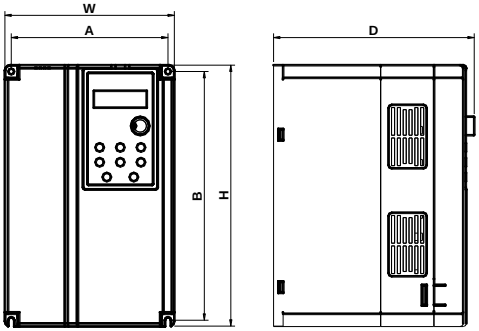

Fig 2.6-1Schematic Diagram for Physical Dimensions and Mounting Dimensions (below 7.5kW)

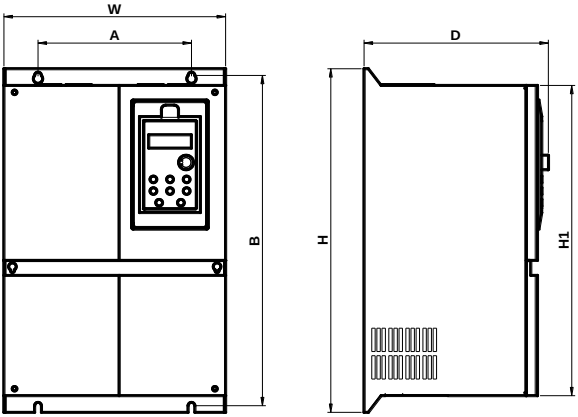

Fig2.6-2 Schematic Diagram for Physical Dimensions and Mounting Dimensions (11kW~110kW）

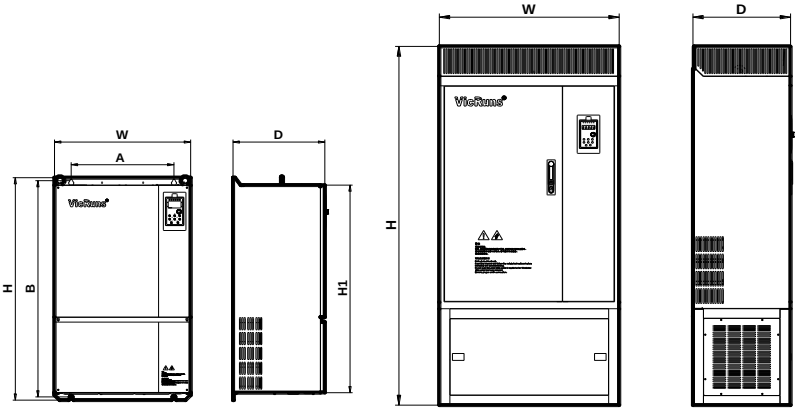

Fig2.6-3 Schematic Diagram for Physical Dimensions and Mounting Dimensions (up 132 kW)

Table2-3 Physical Dimensions and Installation Hole(mm)

Model	Mounting Hole (mm)		Physical Dimensions (mm)				Diameter of Mounting Hole (mm)	Weight (kg)
	A	B	H	H1	W	D	d	kg
Single-phase 220V，50/60Hz								
VD300A-2S-0.7GB	106.5	175	185	/	118	169	4.5	1.8
VD300A-2S-1.5GB								
VD300A-2S-2.2GB								
VD300A-2S-3.7GB	148	235	247	/	160	191	5.5	3.0
VD300A-2S-5.5GB								
Three-phase 380V，50/60Hz								
VD300A-4T-0.7GB	106.5	175	185	/	118	169	4.5	1.8
VD300A-4T-1.5GB								
VD300A-4T-2.2GB								
VD300A-4T-3.7GB/5.5PB								
VD300A-4T-5.5GB/7.5PB	148	235	247	/	160	191	5.5	3.0
VD300A-4T-7.5GB/11PB								
VD300A-4T-11GB/15PB	120	308	320	284	190	196.5	6.5	7.5
VD300A-4T-15GB/18.5PB								
VD300A-4T-18.5G/22P	180	396	412	372	260	216.5	8	13.5
VD300A-4T-22G/30P								
VD300A-4T-30G/37P								
VD300A-4T-37G/45P								
VD300A-4T-45G/55P	260	530	550	510	377	300	8	30
VD300A-4T-55G/75P								
VD300A-4T-75G/90P								
VD300A-4T-90G/110P	350	670	690	640	450	330	9	55
VD300A-4T-110G/132P								
VD300A-4T-132G/160P	350	850	870	810	450	330	9	60
VD300A-4T-160G/185P	400	875	900 1350	840	530	370	11	85
VD300A-4T-185G/200P								
VD300A-4T-200G/220P								
VD300A-4T-220G/250P	500	970	1000	940	700	395	13	125

VD300A-4T-250G/280P			1450					
VD300A-4T-280G/315P								
VD300A-4T-315G/355P								
VD300A-4T-355G/400P	560	1270	1300 1750	1240	800	415	13	200
VD300A-4T-400G/450P								
VD300A-4T-450G/500P								
VD300A-4T-500G/560P								

2.7 Physical Dimensions Of External Keyboard

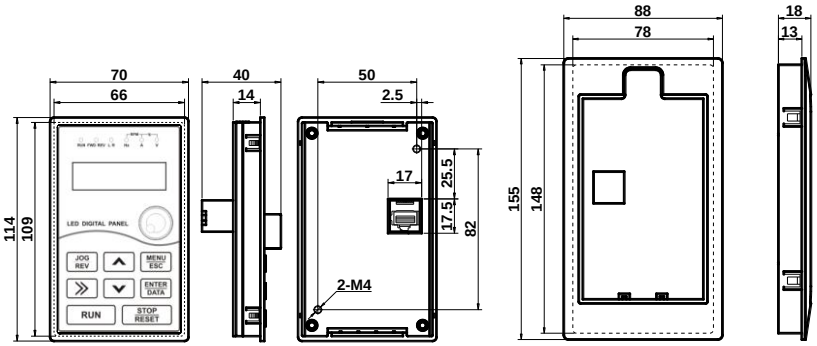

Physical Dimensions of Keyboard Physical Dimensions of Keyboard holder

Fig.2.7-1 External keyboard and holder dimension

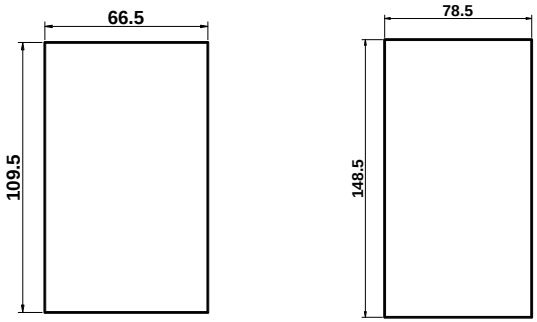

Mounting Hole Dimensions of External Keyboard

Mounting Hole Dimensions of External Keyboard holder

Fig.2.7-2 External keyboard and holder mounting dimension

WARNING

- This inverter keyboard can be directly connected.
- A holder can be added to keyboard, but need to order separately.

2.8 Braking Unit Model Selection Guide

2.8.1 Resistor Value Selection

While braking, the recycling energy of motor nearly all consumed on braking resistor.

According to formula U*U/R=Pb

In formula U---braking voltage when system is stability braking (different system with different value, for AC380V system, it generally take DC700V)

Pb----braking power

2.8.2 Braking Resistor Power Selection

Theoretically, braking resistor power is the same with braking power, but in consideration that the de-rating is 70%,

According to formula: 0.7Pr=Pb*D

Pr----power of resistor

D----braking frequency(percentage of regenerating process account for the complete process)

Elevator----20%~30%

Uncoiling and recoiling----20%~30%

Centrifuge----50%~60%

Accidental braking loading----5%

General take 10%

Table 2-4 Inverter braking unit selection

Model	Recommend Power Braking Resistor	Recommend Resistance Braking Resistor	Braking Unit	Remarks
Single-phase 220V 50/60Hz				
VD300-2S-0.7GB	80W	≥150Ω	Internal	No special instructions
VD300-2S-1.5GB	100W	≥100Ω		
VD300-2S-2.2GB	100W	≥70Ω		
VD300-2S-3.7GB	200W	≥40Ω		
VD300-2S-5.5GB	300W	≥25Ω		
Three-phase 380V 50/60Hz				
VD300-4T-0.7GB	150W	≥300Ω	Internal	No special instructions
VD300-4T-1.5GB	150W	≥220Ω		
VD300-4T-2.2GB	250W	≥200Ω		
VD300-4T-3.7GB/5.5PB	300W	≥130Ω		
VD300-4T-5.5GB/7.5PB	400W	≥90Ω		
VD300-4T-7.5GB/11PB	500W	≥65Ω		
VD300-4T-11GB/15PB	800W	≥43Ω		
VD300-4T-15GB/18.5PB	1000W	≥32Ω		
VD300-4T-18.5G/22P	1300W	≥25Ω	External	VDBU-35-B

VD300-4T-22G/30P	1500W	≥22Ω		
VD300-4T-30G/37P	2500W	≥16Ω		
VD300-4T-37G/45P	3.7kW	≥16Ω		VDBU-35-B
VD300-4T-45G/55P	4.5kW	≥16Ω		VDBU-35-B
VD300-4T-55G/75P	5.5kW	≥8Ω		VDBU-70-B
VD300-4T-75G/90P	7.5kW	≥8Ω		VDBU-70-B
VD300-4T-90G/110P	9.0kW	≥4Ω		VDBU-70-B×2
VD300-4T-110G/132P	11kW	≥4Ω		VDBU-70-B×2
VD300-4T-132G/160P	13kW	≥4Ω		VDBU-70-B×2
VD300-4T-160G/185P	16kW	≥2.5Ω		VDBU-200-B
VD300-4T-185G/200P	18kW	≥2.5Ω		VDBU-200-B
VD300-4T-200G/220P	20kW	≥2.5Ω		VDBU-200-B
VD300-4T-220G/250P	22kW	≥2.5Ω		VDBU-200-B
VD300-4T-250G/280P	25kW	≥1.5Ω		VDBU-200-B×2
VD300-4T-280G/315P	28kW	≥1.5Ω		VDBU-200-B×2
VD300-4T-315G/355P	32kW	≥1.5Ω		VDBU-200-B×2
VD300-4T-355G/400P	35kW	≥1.5Ω		VDBU-200-B×2
VD300-4T-400G/450P	42kW	≥1.0Ω		VDBU-200-B×3
VD300-4T-450G/500P	45kW	≥1.0Ω		VDBU-200-B×3
VD300-4T-500G/560P	50kW	≥1.0Ω		VDBU-200-B×3

WARNING

- Table 2-4 is a guiding data, user can select different resistor value and power according to actual situation.
- Selection of braking resistor is based on the motor generation power in actual application system, it is related with system inertia, deceleration time, potential load Energy, it is decided by user's actual situation.
- The greater the inertia of system, the required speed deceleration is shorter, the braking is more frequent, so the braking resistor require a bigger power small value of resistor.

2.9 Routine Repair and Maintenance of Inverter

The influence of the ambient temperature, humidity, dust and vibration will cause the aging of the devices in the inverter, which may cause potential fault of the inverter or reduce the service life of the inverter. Therefore, it is necessary to carry out routine and periodical maintenance on the inverter, it must be regularly maintenance for every 3~6 months.

2.9.1 Daily Round Check

Daily Inspection Projects

WARNING

- If the heat from motor and the run inverter is higher than normal temperature
- If any abnormal noise or vibration from motor and the run inverter
- If current value of inverter loading current is as normal level
- If inverter cooling fan is run as normal, if it is stained with oil dirt and speed getting low.
- If the color of main control circuit terminal changed or rusted, if any arc discharge between input and output phases.
- If the enclosure of inverter is overheat, if inverter inside is filled with dirt or metal powder, or oil dirt on circuit board or conductive copper bar etc.
- If inverter is installed in cabinet, good ventilation is kept, cooling fan is run as normal.

2.9.2 Regular Maintenance

Regular maintenance item

WARNING

- Clear inverter cooling air duct regularly, once the speed of cooling fan inside cabinet getting low or stop, then replace it on time.
- Check if the connecting screws in main circuit and control circuit is loosed, any signs of overheat on connecting copper bar inside inverter.
- Check if the insulation performance of motor and main circuit cable, any insulation damage of main circuit and control circuit, especially the surface contacting with metal has cut.
- Non-professional staff or untrained operator cannot do maintenance or change device of the inverter, failure to comply will result in personal hurt or damage the device.
- User is required to do insulation test on inverter. While testing insulation resistor of motor and cable, make sure to disconnect inverter in advance. Otherwise the inverter can be damaged.
- If user insist to do insulation test on inverter, make sure all the input output terminal of main circuit (L, N, R, S, T, U, V, W, P1, P+, PB, P-) are reliably grounded, use a 500V Meg Ohm Meter to check.
- Do not use a 500V meg ohm meter to check on control circuit terminal, otherwise it can damage inverter.

2.9.3 Inverter Wearing Part Replacement

Some device inside inverter can get wearing or aged after using for a certain period, in order to ensure inverter operate reliably, it is necessary to do preventive maintenance, when necessary some device need to be replaced.

The wearing part of inverter mainly as cooling fan, filtering big capacity electrolytic capacitor. Those life is closely related with its applicant environment and maintain condition.

WARNING

- In general condition the inverter cooling fan need to replace for every 2-3 years.

in general condition the big capacity electrolytic capacitor of inverter need to replace for every 4-5 years.

2.9.4 Inverter Storage

If inverter has to be kept for some time or long time after purchasing, should pay attention to the

following:

WARNING

● Do not keep it in high temperature, humid or vibrated place with metal powder, and keep good ventilation.

● If inverter kept too long without run, the filter capacitor performance will reduce. For every 2years, the inverter should be powered on to restore the performance of big capacity filter capacitor, check the inverter function. When power on the inverter, an auto-transformer should be applied to upgrade voltage, and power-on time should less than 5hr.

2.10 Warranty Introduction

For inverter manufactured by our factory, since the date of manufacture, under normal condition application, if inverter failed or damaged within warranty period, the manufacturer response for repair. If inverter is without in warranty period, user response for reasonable repair charge.

WARNING

● Free warranty only refers to the frequency converter

● Please keep the machine outer packing boxes and other packaging materials, to facilitate future inverter relocation or repair and other logistics transportation

Our company will provide 12-month warranty (starting from the leave-factory date as indicated on the bar code) for the failure or damage under normal use conditions. If the equipment has been used for over 12 months, reasonable repair expenses will be charged.

2.10.1 In the warranty period, the following reasons lead to the failure of the inverter and damage, the user must bear part of the maintenance costs.

① The machine failure caused by the user does not use the user manual or beyond the standard specifications range use;

② The machine failure caused by the user repair and modify;

③ The machine failure caused by the user custody, maintenance improper.

④ Damage caused when the inverter is used for abnormal function;

⑤ The machine failure due to fires, floods, salt corrosion, corrosive gases, earthquake, storm, lightning, abnormal voltage or other non resistance caused by damage to the machine.

Chapter 3 Mechanical and Electrical Installation

3.1 Installation Environment

The ambient temperature exerts great influences on the service life of the inverter and is not allowed to exceed the allowable temperature range (-10 ℃ Celsius to 40℃ Celsius).

The inverter shall be mounted on the surface of incombustible articles, with sufficient spaces nearby for heat sinking;

The inverter shall be mounted in locations free from direct sunlight;

The inverter shall be mounted in locations free from high humidity and condensate，Relative humidity is lower than 95%;

The inverter shall be mounted in locations free from oil dirt, dust, and metal powder;

The inverter shall be mounted in locations free from corrosive gas, explosive gas or combustible gas.

3.2 The Installation Direction and Space

Install the inverter vertically so that the heat may be expelled from the top. to ensure the heat dissipation space of the inverter

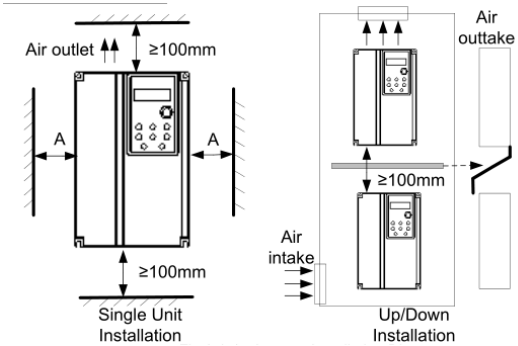

Fig.3-2-1 Inverter Installation Diagram

When Single Unit Installation: When the inverter power is not higher than 15kW, the size A can be omitted. When the inverter power is higher than15kW, the size A shall be higher than 50mm.

When Installation of Upper and Lower Parts: When installing the upper and lower parts of the inverter, the insulating splitter is required.

Power Level	Mounting Dimension	
	B	A
≤15kW	≥100mm	≥50mm
18.5kW-30kW	≥200mm	
≥37kW	≥300mm	

3.3 Removing and Mounting the Cover Plate and Keyboard

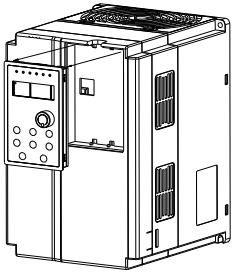

Fig.3.3-1 Removing and mounting the keyboard Diagram

Disassembly of control panel: put the middle finger on upper part of control panel, lightly press the upper clip and pull out.

Installation of control panel: fixing the bottom hook of panel to the install-claw under the tank of panel, put middle finger on upper clip and pull in until it fixed.

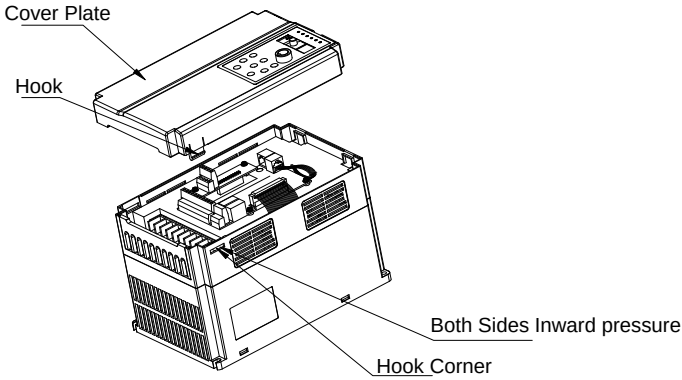

Fig.3.3-2 Removing and mounting the Cover Plate of Plastic Enclosure Diagram

Disassembly of plastic enclosure cover: with your finger or tool to hook into the side of the flat bottom ejection force.

Installation of plastic enclosure cover: fixing the bottom hook of panel to the install-claw under the tank of panel, put middle finger on upper clip and pull in until it fixed.

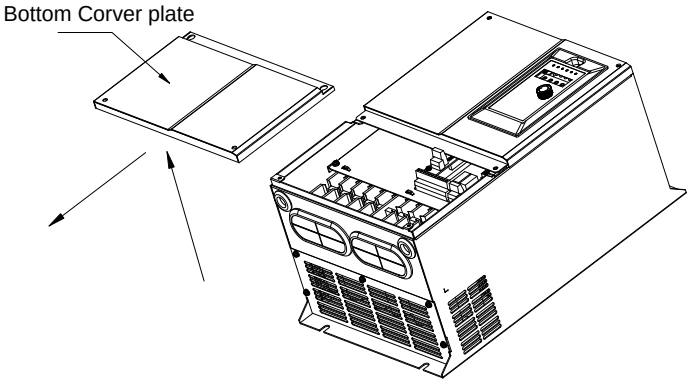

Fig 3.3-3 Removing and Installing the Cover Plate of Sheet-Metal Enclosure

Disassembly and installation of sheet-metal enclosure: with cross screwdriver to screw off the two screws at the bottom of the undercover plate, then loosen the two screws at the top of the undercover plate, pull-down the undercover plate can be disassemble, reverse order the undercover plate can be install.

3.4 Inverter and External Electrical Parts Connection

3.4.1 Schematic Diagram for Inverter and External Electrical Parts Connection

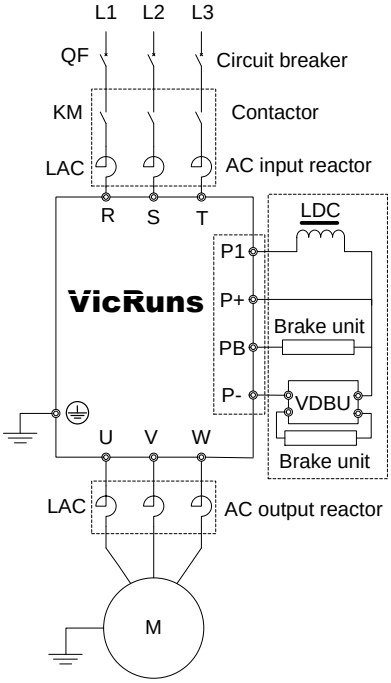

Fig 3.4-1 Inverter and external units electrical parts diagram

Table 3-1 the peripheral devices

Breaker	Must install the isolation switch device such as a obvious segmentation between the grid and frequency inverter, and ensure the personal safety when equipment maintenance. The capacity of breaker is 1.5~2 time of frequency inverter rated current, the time characteristic of breaker should fully consider the time characteristic of the frequency inverter overload protection.
Leakage breaker	Due to the output of the inverter is high speed pulse voltage, so there is a high frequency leakage occurred; when install leakage breaker in the input end of the frequency inverter, please select special type B leakage breaker, the leakage current set value is 300mA.
Delay type fuse	In North America, must use delay type fuse(FUSE current rating value is 225% max load output current) before inverter, avoid the breakdowns and expanded because the equipment failure. Please refer to table 3-2 selection fuse.
Contactor	Frequently closed and disconnect contactor will cause inverter fault, the highest frequency is no more than 10 times/min. When using braking resistance, in order to prevent damage of breaking resistance is overheating, please install the braking resistance overheat detection of thermal protection relay, through thermal protection relay contact control contactor disconnect power supply side.
Input AC reactor or DC reactor	1. Inverter power supply capacity is greater than 600kVA. 2. On the same power source node has switch type reactive power compensation capacitor or with silicon controlled phased load, will produce a lot of peak current, could lead to converter part components damage. 3. When the inverter three-phase power supply voltage unbalance is more than 3%, has the potential to cause converter part components damage. 4. To improve the power factor of the input side of the inverter. If above situation occurs, please access AC reactor in the frequency inverter input side or install DC reactor in bus side.
Thermal protection relay	Although the inverter motor with overload protection function, but when an inverter driving two or more motor or driven multi pole motor, in order to prevent overheating of the motor accident, please install thermal protection relay in the converter and each motor and the motor overload protection P13.00 parameter is set to “1” (motor protection is disabled)
Output AC reactor	When the connect wire between inverter and motor more than 100m, suggest install AC output reactor that can suppress high frequency oscillation, to avoid motor insulation damage, leakage current is large and the inverter frequency protection.
Braking assembly	The dotted box type G type 15kW and the following models built in braking unit, did not elicit P1 terminal; G type 18.5kW and above models without built-in braking unit, no elicit PB terminal.
Protective earth	The memory of the leakage current of inverter, in order to ensure the safety of the inverter and motor must grounding, grounding resistance should be less than 10Ω. The grounding wire should be as short as possible, wire diameter should conform to table 3-3 standard.

	Note: the data in the table in only two conductors using the same metal case is correct, if not so, protective conductor cross-sectional area should be through the method of conductivity coefficient equivalent using the determined.

Table 3-2 The recommended fuse capacity and copper core insulation wire section

Power	Inlet Wire Protector	Power	Inlet Wire Protector	Power	Inlet Wire Protector
	Fuse(A)		Fuse(A)		Fuse(A)
7.5kW	20	75kW	200	280kW	800
11kW	32	90kW	250	315kW	1000
15kW	35	110kW	315	355kW	1000
18.5kW	50	132kW	400	400kW	1250
22kW	63	160kW	450	450kW	1500
30kW	80	185kW	560	500kW	1800
37kW	100	200kW	560	560kW	2000
45kW	125	220kW	630		
55kW	160	250kW	800		

Table 3-3 Conductor cross-sectional area

Conductor cross-section area S(mm2)	The smallest conductor cross-section area Sp (mm2)
S≤16	S
16＜S≤35	16
35＜S	S/2

3.4.2 Guide to the External Electrical Parts

Table 3-4 Selection table of circuit breaker、contactor、wire

Model No	Circuit Breaker (A)	Recommended Contactor(A)	Recommended Wire of Input side main loop (mm2)	Recommended wire of output side main loop (mm2)	Recommended wire of control loop (mm2)
Single-phase 220V 50/60Hz					
VD300-2S-0.7GB	16	10	2.5	2.5	1.0
VD300-2S-1.5GB	20	16	4	2.5	1.0
VD300-2S-2.2GB	32	25	4	4	1.0
VD300-2S-3.7GB	40	32	6	6	1.0

VD300-2S-5.5GB	63	40	6	6	1.0
Three-phase 380V 50/60Hz					
VD300-4T-0.7GB	10	10	2.5	2.5	1.0
VD300-4T-1.5GB	16	10	2.5	2.5	1.0
VD300-4T-2.2GB	16	10	2.5	2.5	1.0
VD300-4T-3.7GB/5.5PB	25	16	4	4	1.0
VD300-4T-5.5GB/7.5PB	32	16	4	4	1.0
VD300-4T-7.5GB/11PB	40	25	4	4	1.0
VD300-4T-11GB/15PB	63	32	4	4	1.0
VD300-4T-15GB/18.5PB	63	40	6	6	1.0
VD300-4T-18.5G/22P	100	40	6	6	1.5
VD300-4T-22G/30P	100	63	10	10	1.5
VD300-4T-30G/37P	125	63	16	16	1.5
VD300-4T-37G/45P	160	100	16	16	1.5
VD300-4T-45G/55P	200	100	25	25	1.5
VD300-4T-55G/75P	200	125	35	35	1.5
VD300-4T-75G/90P	250	125	50	50	1.5
VD300-4T-90G/110P	250	160	70	70	1.5
VD300-4T-110G/132P	350	350	95	95	1.5
VD300-4T-132G/160P	400	400	150	150	1.5
VD300-4T-160G/185P	500	400	185	185	1.5
VD300-4T-185G/200P	630	400	240	240	1.5
VD300-4T-200G/220P	630	630	150*2	150*2	1.5
VD300-4T-220G/250P	630	630	150*2	150*2	1.5
VD300-4T-250G/280P	800	630	185*2	185*2	1.5
VD300-4T-280G/315P	800	800	150*3	150*3	1.5
VD300-4T-315G/355P	800	800	150*3	150*3	1.5
VD300-4T-355G/400P	800	800	150*4	150*4	1.5
VD300-4T-400G/450P	1000	1000	150*4	150*4	1.5
VD300-4T-450G/500P	1000	1000	150*4	150*4	1.5
VD300-4T-500G/560P	1250	1250	185*4	185*4	1.5

Table 3-5 Selection table of input/output AC Reactor、DC reactor

Inverter Capacity(kW)	Input AC Reactor		Output AC Reactor		DC Reactor	
	Current(A)	Inductance (mH)	Current(A)	Inductance(mH)	Current(A)	Inductance(mH)
VD300-4T-0.7GB	5	3.8	5	1.5	/	/
VD300-4T-1.5GB	5	3.8	5	1.5	/	/
VD300-4T-2.2GB	7	2.5	7	1	/	/
VD300-4T-3.7GB/5.5PB	10	1.5	10	0.6	/	/
VD300-4T-5.5GB/7.5PB	15	1.0	15	0.25	/	/
VD300-4T-7.5GB/11PB	20	0.75	20	0.13	/	/
VD300-4T-11GB/15PB	30	0.60	30	0.087	/	/
VD300-4T-15GB/18.5PB	40	0.42	40	0.066	/	/
VD300-4T-18.5G/22P	50	0.35	50	0.052	40	1.3
VD300-4T-22G/30P	60	0.28	60	0.045	50	1.08
VD300-4T-30G/37P	80	0.19	80	0.032	65	0.80
VD300-4T-37G/45P	90	0.16	90	0.030	78	0.70
VD300-4T-45G/55P	120	0.13	120	0.023	95	0.54
VD300-4T-55G/75P	150	0.10	150	0.019	115	0.45
VD300-4T-75G/90P	200	0.12	200	0.014	160	0.36
VD300-4T-90G/110P	250	0.06	2501	0.011	180	0.33
VD300-4T-110G/132P	250	0.06	250	0.011	250	0.26
VD300-4T-132G/160P	290	0.04	290	0.008	250	0.26
VD300-4T-160G/185P	330	0.04	330	0.008	340	0.18
VD300-4T-185G/200P	400	0.04	400	0.005	460	0.12
VD300-4T-200G/220P	490	0.03	490	0.004	460	0.12
VD300-4T-220G/250P	490	0.03	490	0.004	460	0.12
VD300-4T-250G/280P	530	0.03	530	0.003	650	0.11
VD300-4T-280G/315P	600	0.02	600	0.003	650	0.11
VD300-4T-315G/355P	660	0.02	660	0.002	800	0.06
VD300-4T-355G/400P	400*2	0.04	400*2	0.005	460*2	0.12
VD300-4T-400G/450P	490*2	0.03	490*2	0.004	460*2	0.12
VD300-4T-450G/500P	530*2	0.03	530*2	0.003	650*2	0.11
VD300-4T-500G/560P	600*2	0.02	600*3	0.003	650*2	0.11

3.5 Standard Wiring Diagram

3.5.1 Standard Wiring Diagram for Single-phase 220V Inverter

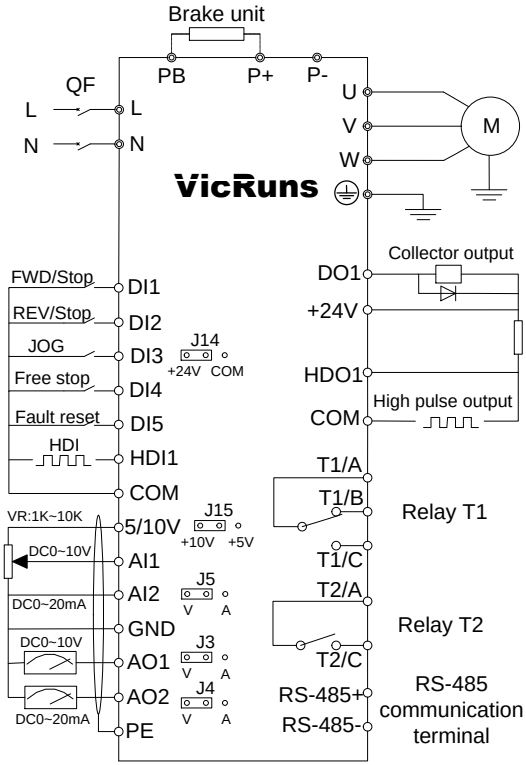

Fig 3.5-1 Standard Wiring Diagram for single phase 220V Inverter

Precautions are as follows:

1）Terminal ◎refers to Main circuit terminal, terminal ○refers to control circuit terminal；

2）”B” which is followed the product model represents Self-braking unit；

3）Braking resistor’s selection is based on the user demand. refer to Table 2-4;

4）Signal lines and power line must be separated alignments, if you want to control cables and power cable cross, let them cross by 90 degree angle. It is best to choose shielded twisted-pair cabling for analogue signal, the selection of power cable is shield three-core cable(The specification should enlarge a class as much as the ordinary electric cables), or follow the inverter user manual.

3.5.2 Standard Wiring Diagram for Three-phase and Lower than 15kW Inverter:

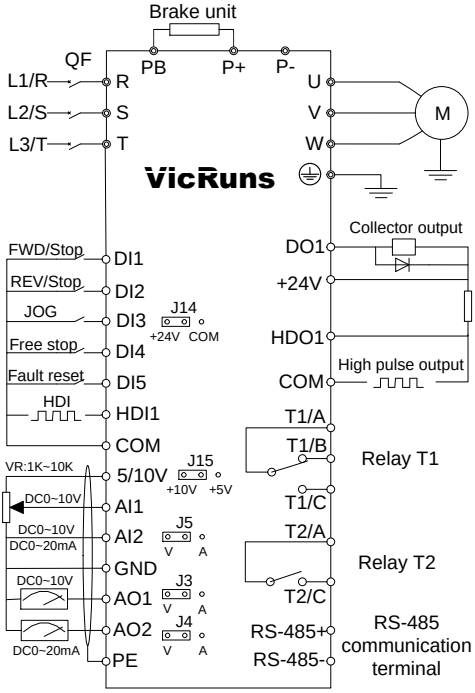

Fig 3.5-2 Standard Wiring Diagram for three-phase and lower than 15kW Inverter

Precautions are as follows:

1）Terminal◎refers to Main circuit terminal, terminal ○ refers to control circuit terminal;

2）B which is followed the product model represents Self-braking unit;

3）Braking resistor's selection is based on the user demand. refer to table 2-4;

4）Signal lines and power line must be separated alignments, if you want to control cables and power cable cross, let them cross by 90 degree angle. It is best to choose shielded twisted-pair cabling for analogue signal, the selection of power cable is shield three-core cable(The specification should enlarge a file as much as the ordinary electric cables), or follow the inverter user manual

3.5.3 Standard Wiring Diagram for Three-phase and Higher than 18.5kW Inverter:

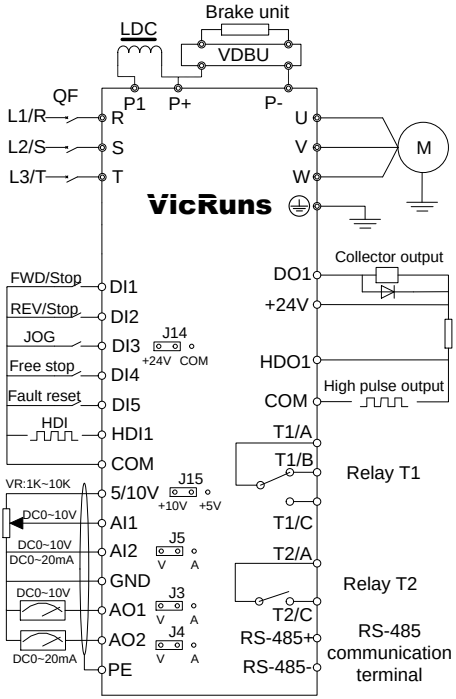

Fig 3.5-3 Standard Wiring Diagram for three-phase and higher than 18.5kW Inverter

Precautions are as follows:

1）Terminal◎refers to Main circuit terminal, Terminal ○ refers to control circuit terminal；

2）B which is followed the product model represents Self-braking unit；

3）Braking resistor's selection is based on the user demand refer to Fig 2-4;

4）Signal lines and power line must be separated alignments, if you want to control cables and power cable cross, let them cross by 90 degree angle. It is best to choose shielded twisted-pair cabling for analogue signal, the selection of power cable is shield three-core cable(The specification should enlarge a file as much as the ordinary electric cables), or follow the inverter user manual.

3.6 Main Circuit Terminals

3.6.1 Wiring Diagram of Main Circuit Terminals

3.6.1.1 Wiring Diagram of Main Circuit of Single-phase 220V Inverter

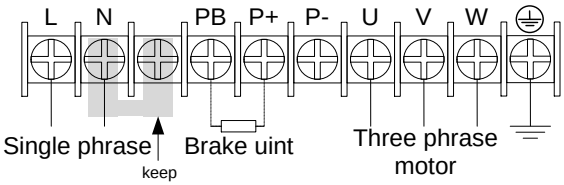

Fig 3.6-1 Wiring diagram of main circuit of single phase 220V inverter

3.6.1.2 Wiring Diagram of Main Circuit of Three-phase and Lower Than 2.2kw Inverter

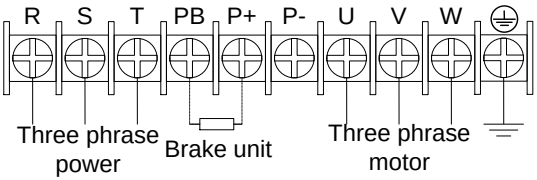

Fig 3.6-2 Wiring diagram of main circuit of three-phase and lower than 2.2kW inverter

3.6.1.3 Wiring Diagram of Main Circuit of Three-phase 3.7kw-15kw Inverter

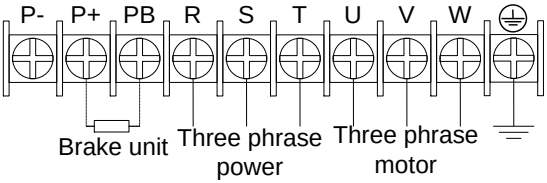

Fig 3.6-3 Wiring diagram of main circuit of three-phase 3.7kw-15kw inverter

3.6.1.4 Wiring Diagram of Main Circuit of Three-phase and Higher Than 18.5kw Inverter

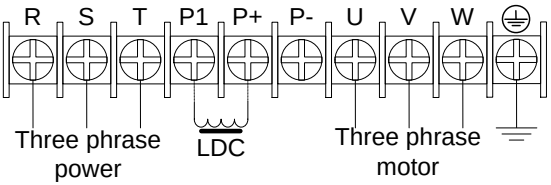

Fig 3.6-4 Wiring diagram of main circuit of three-phase and higher than 18.5kw inverter

3.6.2 Instructions of Main Circuit Terminals of Inverter:

Table 3-6 Instructions of main circuit terminals of inverter

Terminals	Function Instruction
L, N	Single-phase power supply input terminals, external connection of grid single phase 220VAC power supply
R, S, T	Input terminal of AC 3-phase power supply, external connection of grid 3phase AC power supply
U, V, W	Output terminal of 3phase power supply, external connection of AC 3phase motor
P+, P-	Positive and negative terminals of DC bus, external connection of braking unit terminal
P+, PB	External connection of braking resistor terminal
P1, P+	External connection of DC electric reactor terminal
⏚	PE Grounding terminal

DANGER

● The voltage class of VD300 series inverter 3phase power has two class: 220V, 380V, before connecting power, please make sure the power class on inverter nameplate is the same with the accessing power. Otherwise do not connect.

● DC bus P+ P-terminal: take note that when power outrage there is residual voltage on DC bus P+ P- terminal, need to wait for a while until CHARGE LED off. Otherwise it is danger of electric shock.

● When selecting external braking unit, note the polarity of P= P- cannot be reversely connected, otherwise it can result in damage or even fire.

Do not directly connect braking resistor to DC bus, it may result damage or fire.

WARNING

1) Input power L, N or R, S T: the cable connection at input side of the inverter has no phase sequence requirement.

2) Braking unit cable length should not exceed 10m, twisted pair or double cable parallel wiring should be used.

3) Braking resistor connecting terminal P+、PB: confirm whether the device has built-in braking unit, its braking resistor connecting terminal is effect. The braking resistor selection table 2-4 recommending value and the wiring distance should less than 5M. Otherwise it can damage inverter.

4) External DC reactor connecting terminal P1、P+: for external DC reactor to 18.5kW and above power inverter, get rid of the connector between P1、P+ terminal during installation, reactor is installed between the 2 terminal.

5) Inverter output side U、V、W: the output side cannot connect capacitor or surge absorber, otherwise it will affect inverter in self-protection frequently or damage.

6) In case the motor cable is too long, it may generate electrical resonance easily due to the impact of distributed capacitance, thus damaging the motor insulation or generating higher leakage current to invoke over current protection of the inverter. When the length of motor cable is longer than 100 meters, it needs to install an AC output reactor.

7) PE Grounding terminal: ⏚ This terminal shall be grounded reliably, with resistance of earth cable of less than 10Ω. Otherwise, it may cause fault or damage the inverter.

Do not share the earth terminal with zero line N terminal, otherwise it will result equipment abnormal run or damage.

3.7 Control Circuit Terminal

3.7.1 Control Panel Layout Diagram and Extension Card Installation Schematic Diagram

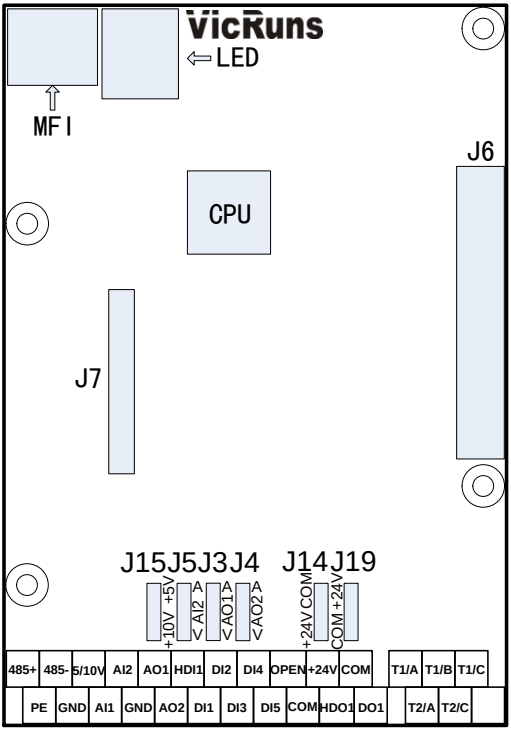

Fig3.7-1 Diagram of main control board and function extension card connection

3.7.2 Function Description of Control Circuit Terminal

Table 3-7 Function description of control circuit terminal

Type	Terminal Sign	Terminal Name	Function
Power Supply	5V/10V-GND	External 5V/10V power supply	Provide +5V/10V power supply for external-units, the maximum output current is 20mA. J15 jumper on main control board to select 5V or 10V power output, default is 10V. It is generally used as the operating power supply for the external potentiometer. The potentiometer resistance range is 1kΩ~10KΩ
	+24V-COM	24V power supply	Provide +24V power supply for external units. It is generally used as the operating power supply for digital input/output terminals and the external sensor. The maximum output current is 200mA.

	OPEN	External power input terminal	Connect to 24V by default, J14 jumper on main control board to select +24V or COM connection. When external power is used to drive DI1~DI5, HDI1, OPEN needs to connect to the external power supply and disconnect J14(disconnecting with +24V/COM).
Communication	485+-485-	RS-485 communication terminals	Standard RS-485 communication terminal, should use twisted pair cable
Analog Input	AI1-GND	Analog input terminal 1	1. Input Voltage range : DC 0V to 10V 2. Input resistance : 22kΩ
	AI2-GND	Analog input terminal 2	Input range : DC 0V to 10V or 0/4mA~20mA, can be selected by J5 jumper on main control board, default DC0V~10V signal; Input impedance: under voltage input-22 kΩ, under current input 500Ω.
Digital Input	DI1-COM	Digital input terminal 1	1. Optical coupling isolation, compatible with dual polarity input, internal resistance 3.3kΩ; 2. Multi-function digital input, through P05.01-P05.05 to set function. 3. The inverter default +24v power supply built-in, COM is common terminal. 4. When using external power, JP14 should be suspended, external +24V connect to OPEN terminal, COM is common terminal(external voltage supply range +24V±10%).
	DI2-COM	Digital input terminal 2	
	DI3-COM	Digital input terminal 3	
	DI4-COM	Digital input terminal 4	
	DI5-COM	Digital input terminal 5	
	HDI1-COM	High speed pulse input terminal	When used as general digit input, it is the same function as DI1~DI5; Can be combine with OPEN terminal as bipolar high speed pulse input terminals, max input frequency is 100kHz。 When use external power, input voltage range +24V±10%; The internal impedance 1.65 kΩ
Analog Output	AO1-GND	Analog output terminal 1	Support 0V~10V voltage or 0/4mA~20mA current output, decided by jumper J3, default 0V~10V voltage output
	AO2-GND	Analog output terminal 2	Support 0V~10V voltage or 0/4mA~20mA current output, decided by jumper J4, default 0V~10V voltage output
Digital Output	DO1-COM	Digital output 1	Optical coupling isolation, dual polarity open collector output; Pull-up voltage range: 5V~24V(pull-up resistance range: 0.48kΩ~10kΩ); Output current range: 2mA~50mA.

	HDO1-COM	Rapid pulse input terminal	When used as general digital output, same function as DO1; Can be combined with the OPEN terminal as bipolar high speed pulse output terminals, max output frequency is 100kHz; Pull-up voltage range: 5V-24V(pull-up resistance range: 0.48kΩ~10kΩ). Output current range: 2mA~50mA
Relay Output	T1/A-T1/B	Relay T1 normally closed terminal	Contact driving capacity: AC250V, 3A, DC 30V, 5A
	T1/A-T1/C	Relay T1 normally open terminal	
	T2/A-T2/C	Relay T2 normally open terminal	
Ground	PE	Shield cable ground terminal	Used to control cable shield grounding, when the interference is big on site or control cable is too long, the PE should be well grounded to reduce EMC affect. PE terminal is not allowed to connect with power N line, otherwise will damaged the inverter

3.7.3 Jumper Switchover Function Description

Table 3-8 Jumper switchover function description

Jumper Switchover Code	Jumper Selection	Function
J3	A port	When jump cap plug connect to A, AO1 terminal select DC0/4mA-20mA current signal output
	V port	When jump cap plug connect to V, AO1 terminal select DC0V-10V voltage signal output
J4	A port	When jump cap plug connect to A, AO2 terminal select DC0/4mA-20mA current signal output
	V port	When jump cap plug connect to V, AO2 terminal select DC0V-10V voltage signal output
J5	A port	When jump cap plug connect to A, AI2 terminal select DC0/4mA-20mA current signal input
	V port	When jump cap plug connect to V, AI2 terminal select DC0V-10V voltage input
J14	24V port	When jump cap plug connect to 24V, OPEN terminal connect with +24V, and HDI1, DI1~DI5 with COM short circuit input effective.

	COM port	When jump cap plug connect to 24V, OPEN terminal connect with COM, and HDI1, DI1~DI5 with +24V short circuit input effective.
J15	+5V port	When jump cap plug connect to +5V, terminal +5V/10V-GND on main board provide power supply +5V
	+10V port	When jump cap plug connect to +10V, terminal +5V/10V-GND on main board provide power supply +10V

3.7.4 Socket Connection Function Description

Table 3-9 Socket connection function description

Socket Code	Function	Description
J6	Control board-power board	J6 is connection port of main control board and power board, power board supply power to main control board and is electric signal gateway between the 2 parts
J7	Control board-extension card	J7 is connection port of extension card and main control board, main control board supply power to extension card and is electric signal gateway between the 2 parts
LED	Control board-LED panel	This plug is connection port of main control board and LED panel, main control board supply power to LED panel and is electric signal gateway between the 2 parts
MFI	Control board-MFI interface	This plug is connection port of main control board and MFI port, main control board supply power to MFI port and is electric signal gateway between the 2 parts

3.7.5 Main Control Terminal Wiring Description

3.7.5.1 Digital Input Terminal

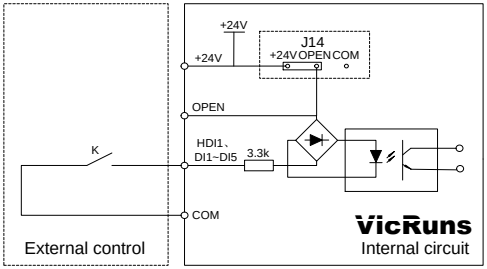

Fig 3.7-2 Schematic Diagram for Connection of Terminal of digital Input

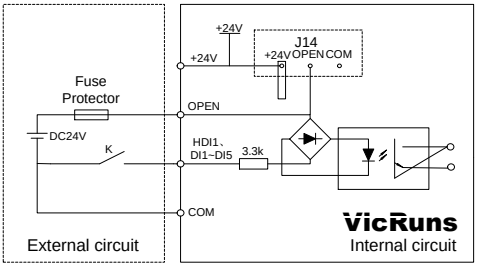

Fig.3.7-3 Diagram of digital input terminal with external power connection

Use external power(power must comply with UL CLASS 2 standard, a 4A fuse protector should be added between power and port), wiring diagram as Fig 3.7-3 showed.(take note to remove the connect wire between J14 jumper OPEN and +24V terminal)

3.7.5.2 Analog Input Terminal

Since the weak analog voltage signal is easy to suffer external interferences, it needs to use shielded twist cable generally and the length shall be no longer than 20meters, as shown in Fig. 3.7-4、3.7-5. In case the analog signal is subject to severe interference, and analog signal source side shall be installed with filter capacitor or ferrite magnetic core, as shown in Fig.3.7-6.

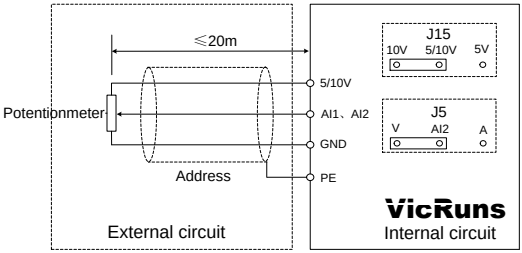

Fig.3.7-4 Schematic Diagram of analog input terminal input voltage signal with shield twist cable

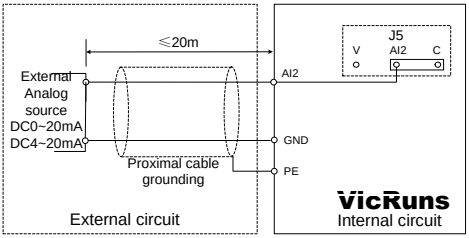

Fig.3.7-5 Schematic Diagram of analog input terminal input current signal with shield twist cable

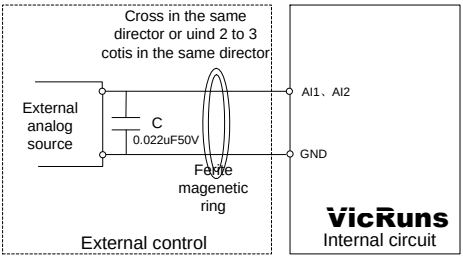

Fig.3.7-6 Schematic Diagram of analog input terminal cable jacket ferrite magnetic ring

3.7.5.3 Digital Output Terminal Using Internal Power Supply

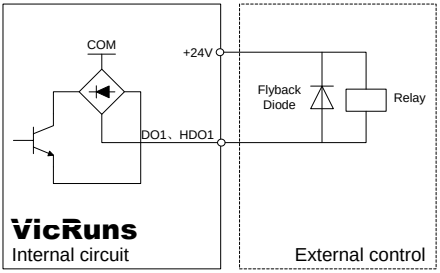

Fig 3.7-7 Schematic Diagram of digital output terminal using internal power supply

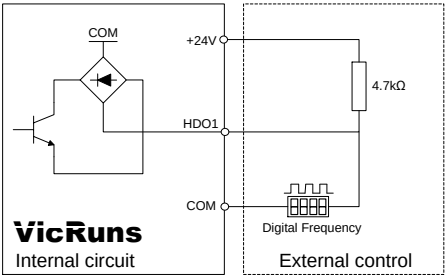

Fig 3.7-8 Schematic Diagram of high speed pulse output terminal using internal power supply

HDO1 in figure 3.7-7 as a digital output terminal (P06.00 set to 1), namely to DO1 function and connection mode are the same

3.7.5.4 Digital Output Terminal Using External Power

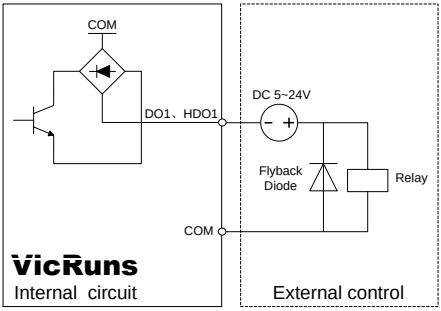

Fig 3.7-9 Schematic Diagram of Digital output terminal using external power

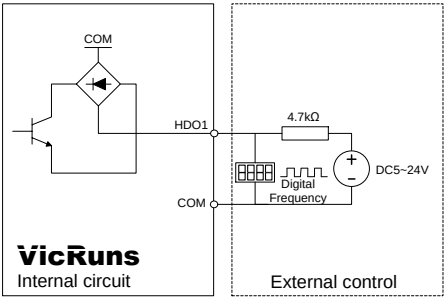

Fig 3.7-10 Schematic Diagram of high speed pulse output using external power

HDO1 Fig 3.7-10 as high speed pulse terminals （P06.00 set to 0）

3.7.5.5 Output Terminals of Analog

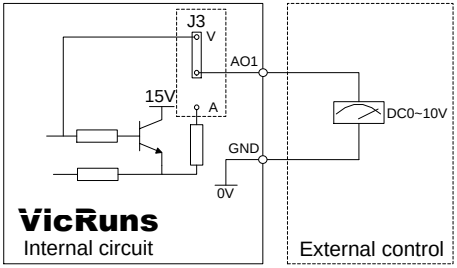

Fig 3.7-11 Schematic Diagram of analog output of voltage signal

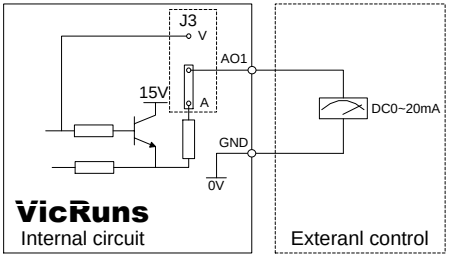

Fig 3.7-12 Schematic Diagram of Terminal of analog output of current signal

3.7.5.6 Output Terminals of Relay

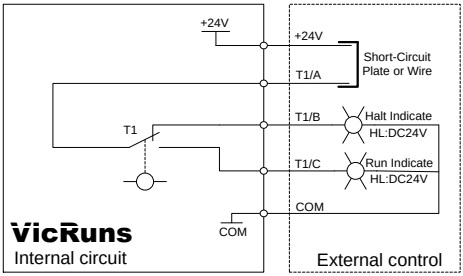

A use internal DC24V power

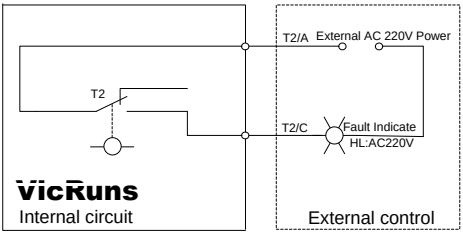

B use external AC220V power

Fig 3.7-13 Schematic Diagram of relay output terminal

Chapter 4 Operation and Display

4.1 Introduction of Operation and Display Interface

With the operation panel, it can perform such operations on the inverter as function parameter modification, inverter working status monitoring and inverter run control (startup and stop).

Refer to Fig.4-1 for the physical appearance and functional zone of the operation panel:

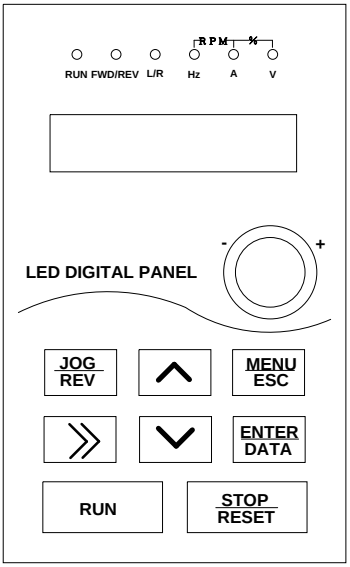

Fig.4.1-1 Operation panel schematic

4.1.1 Keyboard Button Description

Buttons	Name	Function Description
MENU ESC	Programming key	Enter or escape from the first level menu and remove the parameters quickly
ENTER DATA	Enter key	Enter the menu step-by-step Confirm parameters
∧	UP key	Increase data or function code progressively
∨	DOWN key	Decrease data or function code progressively
»	Right-shift key	Move right to select the displaying parameters circularly in stopping and running mode. Select the parameters modifying digit during the parameter modification

RUN	Run key	This key is used to operate on the inverter in key operation mode
STOP RESET	Stop/Reset key	This key is used to stop in running state and it is limited by function code P10.00
JOG REV	Quick key	The function of this key is confirmed by function code P10.01

4.1.2 Description of Function LED Indictor

Name	Description
RUN	When it is off, it indicates the inverter is in stop status; when it is on, it indicates the rotation status; light flashes that inverter in automatic running.
FWD/REV	It is the LED indictor for forward/reverse rotation. When it is on, it indicates the inverter is in forward rotation status; when it is off, it indicates the inverter is in reverse rotation
L/R	When it's off, it indicates the keypad operation control status; when it's on, it indicates the terminal operation control status; when it's flicker, it indicates the remote operation control status
Hz	The unit of frequency(Hz)
A	The unit of current(A)
V	The unit of voltage(V)
RPM	The unit of rotation speed(RPM)
%	Unit:%

4.1.3 Description of Function Code Viewing and Modification Methods

The operation panel of the inverter adopts three-level menu structure to carry out operations such as parameter setting.

The three-level menu includes function parameter set (level 1 menu)→Function code (level 2 menu)→Function code setup value (level 3 menu). Refer to Fig.4.1-2 for the operation procedure.

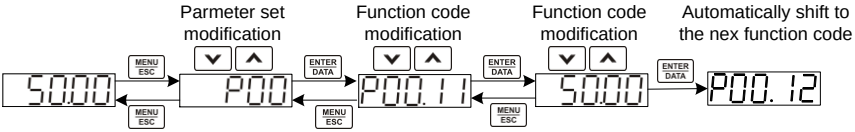

Fig.4.1-2 Three level menu operation flow chart

When operating on level 3 menu, press MENU/ESC key or ENTER/DATA key to return to level 2 menu. The difference between them is described as follows:

Pressing ENTER/DATA KEY will save the setup parameter and return to the level 2 menu and then automatically shift to the next function code, while pressing MENU/ESC key will directly return to level 2 menu without saving the parameter, and it will return to the current function code.

In level 3 menu status, while one bit flashing user can change its value via ^/v. If there is 2bit need change then press >> to shift to the desired bit for value revise. If the parameter has no flashing bit, it means it is unchangeable. Reason as following:

1）The function code is an unchangeable parameter, such as actual detection parameter, run record parameter, etc; the parameter values whether in running or stooping conditions are normally on display.

2）The function code cannot be modified in running status, and inverter in running state, it can be modified only after the it stopped; the parameter values in the condition of running normally on display, in the condition of stop flashing.

4.1.4 State Display

The state display of operation panel is divided into stopping states parameter display, run state parameter display, function code parameter editing state display and fault alarm state display and so on.

1. Stop parameter display state

when the inverter is in the stopping state, the keyboard will display stopping parameters which is shown in figure. The 3bits on right indicator stand for the unit of the parameter, the 3bits on left indicator stand for current status. Such as, the run direction signal is reverse, then FWD/REV light on. Select check menu(also called user setup/user customize), only display the function code which is different from parameter set value and manufacturer value, press ^/v can browse function code which is different from all the parameter set value and manufacturer value, are convenient for the user to confirm which parameter are changed.

Press>> to display stop status parameter recycling. Function code P10.05 defines stop status parameter.

2. Displayed state of run parameters

After the inverter receives Enabled run commands, the inverter will enter into the run state and the keypad will display the run parameters. RUN is on while the FWD/REV is determined by the current run direction which is shown as flow.

Press>> to display run status parameter recycling. Function code P10.03 P10.04 defines run status parameter.

3. Function code editing status

In stop/run/error alarm status, press MENU/ESC can enter into edit status(if with password then input it, refer to P29.00). Edit status has 2 levels menu in sequence: function code group or function code----function code parameter, press ENTER/DATA enter into function parameter display status. In function parameter display status, press ENTER/DATA to save and jump to the next parameter, press MENU/ESC to quit to previous parameter.

4.2 Motor Parameter Self-learning

Select vector control mode, before inverter operation, must input the parameter from the nameplate of the motor, VD300 series inverter will match standard motor parameter according to this message. Vector control mode is highly dependent on motor parameter, so to acquire good control performance, it needs correct motor parameter.

Pay attention to below points during motor parameter self-learning.

1) Firstly to set run command source parameter P00.01=0 as control panel command channel, if motor self-learning required, then remove motor loading.

2) Input motor nameplate parameter correctly, including rate power/rate voltage/rate current/rate frequency/rate RPM, its corresponding function code P02.01~P02.05. If select motor 2, corresponding function code P20.01~P20.05

3) Via set function code P00.23 to select self-learning type, press ENTER/DATA to confirm displayed “-TUN-”. Press RUN to start motor self-learning, and RUN light on, motor parameter self-learning is beginning. Once it is completed, LED will display “END”.

4) After motor self-learning check P02.10 parameter, generally this value less than 60% of rate current P02.03, if not it is abnormal, need to do self-learning again, and confirm if motor is with empty loading.

5) When it is unavailable to get motor nameplate message, manufacturer set value can be used. It is only need to input motor power(motor 1 is P02.01, motor 2 is P20.01), no need motor self-learning.

6) If need to get the motor self-learning result recovered to manufacturer value, only need to revise motor rate power(motor 1 is P02.01, motor 2 is P20.01) then change back to required power, the parameter after self-learning can recover to manufacturer value automatically.

7) During self-learning process to press STOP/RESET to stop self-learning. Note the start/stop of self-learning can only be operated by keypad. After self-learning, the function code recover to 0.

4.3 Password Setting

The VD300 series inverter provides user password protection function. When P29.00 is set to non-zero value, it indicates the user password, and the password protection turns Enabled after exiting the function code editing status. When pressing MENU/ESC key again enter function code to view/edit state, “0.0.0.0.0.” will be displayed, and common menu cannot be entered until user password is input correctly.

4.4 Parameter Lock (authority lower than password)

VD300 series inverter provide user parameter lock protection, when P00.21 is 1, lock is effective, if P00.21 is 2, just not allow to modify P29.01. Without setting user password, it can protect user parameter or prevent user get parameter initialized.

Chapter 5 Function Parameter Table

The symbols in the function table are described as follows:

○——It indicates that the parameter setup value can be modified when the inverter is in run state;

◎——It indicates that the parameter setup value cannot be modified when the inverter is in the run state;

●——It indicates that the numerical value of the parameter is the actually measured value, which cannot be modified;

☆——It indicates this parameter is “Factory default parameter” and can be set only by the manufacturer.

P00 Basic Function Parameter Group				
Function Code	Parameter Name	Setting Range	Factory Default Value	Prop-erty
P00.00	Motor Running Mode	0: V/F control mode 1: Sensor-less vector control mode 0 2: Sensor-less vector control mode 1	0	◎
P00.01	Running Command Source	0: Keypad command source (L/R OFF) 1: Terminal command source (L/R ON) 2: Communication command source (L/R flashes)	0	○
P00.02	Main Frequency Source A Selection	0: Keypad potentiometer 1: Function code P00.11 2: AI1 3: AI2 4: AI3(extension card) 5: Simple PLC 6: MS speed 7: High speed PULSE input 8: PID control setting 9: Communication setting	0	◎
P00.03	Frequency Command Source B Selection		4	◎
P00.04	Frequency Command Superposition	0: K1*frequency command A 1: K2*frequency command B 2: K1*frequency command A+K2*frequency command B 3: K1*frequency command A-K2*frequency command B 4: MAX（K1*frequency command A, K2*frequency command B） 5: MIN（K1*frequency command A, K2*frequency command B） Remark: K1: P00.29 K2: P00.30	0	◎

P00.05	Rang of Frequency Command Source B	0: Relative to maximum frequency 1: Relative to frequency source A	0	○
P00.06	Frequency output lower limit after superposition	-100%~100%(100% corresponding to P00.07)	0.0%	◎
P00.07	Maximum Output Frequency	P00.09~650.00Hz	50.00Hz	◎
P00.09	Running Frequency Upper Limit	P00.10~P00.07	50.00Hz	○
P00.10	Running Frequency Lower Limit	0.00Hz~P00.09	0.00Hz	○
P00.11	Keypad Set Frequency	0.00Hz~P00.07 (max output frequency)	50.00Hz	◎
P00.12	MS Speed Command Stage 0 Command Source	0: Function code P11.00 1: Function code P00.11 2: AI1 3: AI2 4: AI3(extension card) 5: High speed pulse 6: PID control set 7: Keypad potentiometer	0	◎
P00.14	Acceleration Time 0	0.0s~3600.0s	Model dependent	○
P00.15	Deceleration Time 0	0.0s~3600.0s	Model dependent	○
P00.16	Acceleration/Deceleration Time Reference Frequency	0: Max output frequency 1: Set frequency	0	○
P00.17	Rotation Direction	0: Same Direction 1: Reverse Direction	0	◎
P00.18	Reverse Control	0: Allow reverse 1: Forbid reverse	0	○
P00.19	Carrier Frequency Setting	1.0kHz~16.0kHz	Model dependent	○
P00.21	Parameter Lock Selection	0: Lock disabled 1: Lock enabled, not enabled to change other parameters except the current one 2: Not enabled operating parameter initializing function code	0	◎

P00.22	Inverter G/P Type	0: G type 1: P type	0	○
P00.23	Motor Parameter Self-learning	0: No operation 1: Dynamic self-learning 2: Static self-learning	0	○
P00.24	AVR Function Selection	0: Disabled 1: Enabled	1	○
P00.25	Over Modulation Selection	0x00~0x11 Unit's digit of LED: 0: Over modulation disabled 1: Over modulation enabled Ten's digit of LED: 0: Mild over modulation 1: Depth over modulation	0x01	○
P00.26	Motor 1 and Motor 2 Selection Channel	0: Function code P00.27 1: Terminal 2: Communication	0	◎
P00.27	Motor Selection By Keypad Setting	0: Motor 1 1: Motor 2	0	◎
P00.28	Load Type Selection(Only Enabled For V/F)	Unit's digit of LED: motor 1 load type selection 0: Non-inertia load 1: Inertia load Ten's digit of LED: motor 2 load type selection 0: Non-inertia load 1: Inertia load	0x00	○
P00.29	K1 Coefficient	0.000~20.000	1.000	◎
P00.30	K2 Coefficient	0.000~20.000	1.000	◎

P01 Start/Stop Control Parameter Group

Function Code	Parameter Name	Setting Range	Factory Default Value	Prop-erty
P01.00	Start Running Mode	0: Direct start 1: DC braking restart 2: Rotation speed tracking restart	0	◎
P01.01	Direct Starting Frequency	0.00Hz~10.00Hz	0.50Hz	◎
P01.02	Startup Frequency Holding Time	0.00s~60.00s	0.00s	◎

P01.03	Braking Current before Starting	0.0%~100.0% (inverter rate current)	0.0%	◎
P01.04	Braking Time before Starting	0.0s~60.0s	0.00s	◎
P01.05	Stop Mode Selection	0: Decelerate to stop 1: Coast stop	0	○
P01.06	Initial Frequency of Stop DC Braking	0.00Hz~P00.07 (max output frequency)	0.00Hz	○
P01.07	Waiting Time of Stop DC Braking	0.000s: Auto delay 0.001s~60.000s	0.001s	○
P01.08	Stop DC Braking Current	0.0%~100.0%	0.0%	○
P01.09	Stop DC Braking Time	0.00s~60.00s	0.00s	○
P01.10	Excitation Braking Coefficient	0: Disabled 100~150: The greater the coefficient, the greater the braking intensity	0	○
P01.11	Short-circuit Braking Current	0.0%~150% (100% corresponding inverter rate current)	0.0%	○
P01.12	Startup Short-circuit Braking Holding Time	0.00s~60.00s	0.00s	○
P01.13	Stop Short-circuit Braking Holding Time	0.00s~60.00s	0.00s	○
P01.14	Switchover Mode between FWD/REV Rotation	0: Switchover with zero frequency 1: Switchover with over starting frequency 2: Switchover at stop speed reach and delay	0	◎
P01.15	FWD/REV Rotation Dead-zone Time	0.0s~3600.0s	0.0S	○
P01.16	Stop Speed	0.00Hz~100.00Hz	0.50Hz	◎
P01.17	Detection Mode of Stop Speed	0: Detect according to speed set value(no stop delay) 1: Detect according to speed feedback(only enabled for vector control）	0	◎
P01.18	Detection Time of Feedback Speed	0.0s~100.0s（P01.17=1 enabled）	0.50s	◎
P01.19	Delay Time of Delay Time	0.0s~100.0s	0.0s	○
P01.20	Running Frequency Lower than Frequency Lower Limit Action	0: Running with frequency lower limit 1: Stop 2: Dormant standby	0	◎

P01.21	Dormant Recover Delay Time	0.0s~3600.0s(corresponding P01.20=2)	0.0s	O
P01.22	Power-on Terminal Running Protection Selection	0: Terminal operation command is disabled when power on 1: Terminal operation command is enabled when power on	0	○
P01.23	Restart Selection Upon Power Failure	0: Disabled restart 1: Allow restart	0	○
P01.24	Waiting Time of Restart Upon Power Failure	0.0s~3600.0s (correspond P01.23=1 effective)	1.0s	○
P01.25	Start Delay Time	0.0s~60.0s	0.0s	◎
P01.26	Acceleration/Deceleration Mode Selection	0: Straight-line type 1: S curve (reserved)	0	◎
P01.27	Ratio of S Curve Start Segment	0.0%~（100.0%-P01.28） (relate to Acceleration/deceleration time)	30.0%	●
P01.28	Ratio of The S Curve End Segment	0.0%~（100.0%-P01.27） (relate to acceleration/deceleration time)	30.0%	●
P01.29	Rotation Speed Tracking Mode Selection	Unit's digit of LED : tracking direction selection 0: According to the actual detection direction 1: According to the run direction before stop Ten's digit of LED: zero speed exciting selection 0: No exciting 1: Exciting	0x00	○
P01.30	Delay Time of Rotation Speed Tracking	0~2000ms	500	○
P01.31	Voltage Rise Rate of Rotation Speed Tracking	0~1000	100	○
P01.32	Jog Speed Tracking Effective Selection	0: Disabled 1: Enabled	1	○
P02 Motor 1 Parameter Group				
Function Code	Parameter Name	Setting Range	Factory Default Value	Prop-erty
P02.00	Motor 1 Type	0: Asynchronous motor	0	●

P02.01	Rated Motor 1 Power	0.4kW~1000.0kW	Model dependent	◎
P02.02	Rated Motor 1 Voltage	0V~1500V	Model dependent	◎
P02.03	Rated Motor 1 Current	0.0A~2000.0A	Model dependent	◎
P02.04	Rated Motor 1 Frequency	0.00Hz~P00.07	Model dependent	◎
P02.05	Rated Motor 1 Rotation Speed	0RPM~65535RPM	Model dependent	◎
P02.06	Motor 1 Stator Resistance	0.000Ω~65.535Ω	Model dependent	○
P02.07	Motor 1 Rotor Resistance	0.000Ω~65.535Ω	Model dependent	○
P02.08	Motor 1 Rotor and Stator Leakage Inductive Reactance	0.0mH~6553.5mH	Model dependent	○
P02.09	Motor 1 Rotor and Stator Mutual Inductive Reactance	0.0mH~6553.5mH	Model dependent	○
P02.10	Motor 1 No-load Current	0.0A~P02.03(rated motor 1 current)	Model dependent	○

P03 Motor 1 Vector Control Parameter Group

Function Code	Parameter Name	Setting Range		Factory Default Value	Property
P03.00	Speed and Torque Control Selection	0: Speed control 1: Torque control		0	◎
P03.01	Speed Loop Proportional Gain 1	0~200.0	Vector 0: 20.0 Vector 1: 10.0		○
P03.02	Speed Loop Integral Time 1	0.000: Integral Disabled 0.000s~10.000s		0.200s	○

P03.03	Speed Loop Parameter Switchover Frequency Point 1	0.00Hz~P03.06		5.00Hz	○
P03.04	Speed Loop Proportional Gain 2	0~200.0	Vector 0: 20.0 Vector 1: 10.0		○
P03.05	Speed Loop Integral Time 2	0.000: Integral Disabled 0.000s~10.000s		0.200s	○
P03.06	Speed Loop Parameter Switchover Frequency Point 2	P03.03~P00.07(max output frequency)		10.00Hz	○
P03.07	Speed Loop Output Filter	0~8(corresponding 0~2^8/10ms)		0	○
P03.08	Vector Control Slip Compensation Coefficient (Motoring Condition)	50.0%~200.0%		100.0%	○
P03.09	Vector Control Slip Compensation Coefficient (Generating Condition)	50.0%~200.0%		100.0%	○
P03.10	Current Loop Proportion Coefficient P	0~60000		1000	○
P03.11	Current Loop Integral Coefficient I	0~60000		1000	○
P03.12	Torque Setting Mode Selection	0: Function code P03.13 1: AI1 2: AI2 3: AI3(extension card) 4: High speed Pulse input 5: Communication setting Notes: 100% of 1~4 corresponding P03.13		0	○
P03.13	Keypad Setting Torque	-300.0%~300.0%（rated motor current）		100.0%	○
P03.14	Torque Setting Filter Time	0.000s~10.000s		0.100s	○
P03.15	Source Setting of Frequency Upper Limit of Forward in Torque Control	0: Function P03.17 1: AI1 2: AI2 3: AI3(extension card) 4: High speed Pulse input 5: Communication setting Notes: 100% of 1~4 relative to the		0	○

		maximum output frequency		
P03.16	Source Setting of Frequency Upper Limit of Reverse in Torque Control	0: Function code P03.18 1: AI1 2: AI2 3: AI3(extension card) 4: High speed Pulse input 5: Communication setting Notes: 100% of 1~4 relative to the maximum output frequency	0	○
P03.17	Frequency Upper Limit Keypad Setting of Forward in Torque Control	0.00Hz~P00.07（Max output frequency）	50.00Hz	○
P03.18	Frequency Upper Limit Keypad setting of Reverse in Torque Control	0.00Hz~P00.07（Max output frequency）	50.00Hz	○
P03.19	Electric Torque Upper Limit Source Setting	0: Function code P03.21 1: AI1 2: AI2 3: AI3(extension card) 4: HS pulse input 5: Communication setting Note: Setting mode 100% of 1-4 corresponds to three times of the motor current	0	○
P03.20	Braking Torque Upper Limit Source Setting	0: Function code: P03.22 1: AI1 2: AI2 3: AI3(extension card) 4: HS pulse input 5: Communication setting Note: Setting mode 100% of 1-4 corresponds to three times of the motor current	0	○
P03.21	Electric Torque Upper Limit Keypad Setting	0.0%~300.0%（rated motor current ）	180.0%	○
P03.22	Braking Torque Upper Limit Keypad Setting	0.0%~300.0%（rated motor current）	180.0%	○
P03.23	Max Voltage Limit	0.0%~120.0%	100.0%	◎
P03.24	Pre-excitation Time	0.000s~10.000s	0.300s	○
P03.25	Weak Magnetic Coefficient in Constant Work Area	0.1~2.0	0.3	○

P03.26	Min Weak Magnetic Point in Constant Work Area	10%~100%	20%	○
P03.27	Vector Control Weak Magnetic Proportion Gain	0~4000	1200	○
P03.28	Low Frequency Torque Compensation Coefficient	0.0%~50.0%	0.0%	○
P03.29	High Frequency Torque Compensation Coefficient	0.0%~50.0%	0.0%	○
P03.30	Low Frequency Torque Compensation Cutoff Frequency	0.00Hz~50.00Hz	5.00Hz	○
P03.31	High Frequency Torque Compensation Cutoff Frequency	0.00Hz~100.00Hz	50.00Hz	○
P03.32	Acceleration/Deceleratio n Torque Compensation Coefficient	0.000~10.000	0.000	○
P03.33	Acceleration/Deceleratio n Torque Compensation Upper Limit	0.0%~50.0%	5.0%	○
P03.34	Acceleration/Deceleratio n Torque Compensation Frequency Lower Limit	0.00Hz~50.00Hz	10.00Hz	○
P03.35	Torque Control Stator Resistance Compensation Selection	0: Disabled 1: Enabled	0	○

P04 Motor 1 V/F Control Parameter Group				
Function Code	Parameter Name	Setting Range	Factory Default Value	Prop -erty
P04.00	Motor 1V/F Curve Setting	0: Straight line V/F curve 1: Multi-stage V/F curve 2: 1.3#power low torque V/F curve 3: 1.7#power low torque V/F curve 4: 2.0#power low torque V/F curve 5: V/F complete separation 6: V/F half separation	0	◎
P04.02	Multi-Stage V/F Frequency Point 1	0.00Hz~P04.04	0.00Hz	○
P04.03	MS V/F Voltage Point	0.0%~110.0%（rated motor 1 voltage）	0.0%	○

	1			
P04.04	MS V/F Frequency Point 2	P04.02~P04.06	0.00Hz	○
P04.05	MS V/F Voltage Point 2	0.0%~110.0%（rated motor 1 voltage）	0.0%	○
P04.06	MS V/F Frequency Point 3	P04.04~P00.07(max output frequency)	0.00Hz	○
P04.07	MS V/F Voltage Point 3	0.0%~110.0%（rated motor 1 voltage）	0.0%	○
P04.08	V/F Slip Compensation Gain of Motor 1	0.0%~200.0%	0.0%	○
P04.09	V/F Torque Boost	0.0%: Fixed torque boost 0.1%~10.0%	0.0%	○
P04.10	Cutoff Frequency of Torque Boost	0.0%~50.0%（relative to rated motor 1 frequency）	20.0%	○
P04.11	Low Frequency Suppression Oscillation Factor of Motor 1	0~100	10	○
P04.12	High Frequency Suppression Oscillation Factor of Motor 1	0~100	10	○
P04.13	Suppression Oscillation Cut-off Point of Motor 1	0.00Hz~P00.07（maximum output frequency）	30.00Hz	○
P04.14	Motor 1 Voltage Setting Source Selection	0: Function code P04.15 1: AI1 2: AI2 3: AI3 (extension card) 4: HS pulse input 5: PID control set up 6: Communication set up	0	◎
P04.15	Motor 1 Keypad Setting Voltage Value	0.0%~100.0%	100.0%	○
P04.16	Motor 1 Voltage Increasing Time	0.0s~3600.0s	5.0s	○
P04.17	Motor 1 Voltage Decreasing Time	0.0s~3600.0s	5.0s	○
P04.18	Motor 1 Maximum Output Voltage	P04.19~100.0%（rated motor 1 voltage）	100.0%	◎
P04.19	Motor 1 Minimum	0.0%~ P04.18（the rated voltage of the	0.0%	◎

	Output Voltage	motor）		
P04.20	Motor 1 V/F Control Weak Magnetic Coefficient	1.00~1.30	1.00	○
P04.21	Energy Saving Running Selection of Motor 1	0: Disabled 1: Enabled	0	◎
P05 Input Terminal Parameters Group				
Function Code	Parameter Name	Setting Range	Factory Default Value	Prop -ety
P05.00	Terminal Control Running Mode	0: Two-line mode 1 1: Two-line mode 2 2: Three-line mode 1 3: Three-line mode 2 4: Alternate control 5: Back and forth control	0	◎
P05.01	DI1 Input Terminal Function Selection	0: No function 1: Forward running (FWD) 2: Reverse running (REV) 3: Three-line mode run control 4: Forward Jog (FJOG) 5: Reverse Jog (RJOG) 6: Coast to stop 7: Run pause 8: Fault reset (RESET) 9: External fault input 10: Frequency setting increase(UP) 11: Frequency setting decrease(UP) 12: Frequency UP/DOWN setting clear 13: Frequency UP/DOWN setting clear temporary 14: Acceleration/deceleration time selection 1 15: Acceleration/deceleration time selection 1 16: MS speed terminal 1 17: MS speed terminal 2 18: MS speed terminal 3 19: MS speed terminal 4 20: Multi-step speed pause 21: Immediate DC braking 22: Deceleration DC braking 23: External stop	1	◎
P05.02	DI2 Input Terminal Function Selection		2	◎
P05.03	DI3 Input Terminal Function Selection		4	◎
P05.04	DI4 Input Terminal Function Selection		6	◎
P05.05	DI5 Input Terminal Function Selection		8	◎
P05.06	HDI1 Input Terminal Function Selection(Can Select HS Pulse Input)		0	◎
P05.07	DI7 Input Terminal Function Selection(Extension Card)		0	◎
P05.08	DI8 Input Terminal Function Selection(Extension Card)		0	◎
P05.09	DI9 Input Terminal Function Selection (Extension Card)			◎

		24: Emergency stop 25: PID control pause 26: Reverse PID action direction 27: PID parameter switchover 28: Pre-excitation command 29: Torque control disabled 30: Acceleration/down disabled 31: Switchover between set A and set B 32: Switchover between combined set and set A 33: Switchover between combined set and set B 34: Simple PLC stop reset 35: Simple PLC pause 36: Counter trigger 37: Counter reset 38: Length trigger 39: Length reset 40: Command switchover to keypad 41: Command switchover to terminal 42: Command switchover to communication 43: Power consumption clear 44: Power consumption holding 45: Swing frequency pause(stop at present frequency) 46: Swing frequency reset(back to center frequency) 47: Motor switchover 48: Clear the current running time 49: User-defined failure input 1 50: User defined failure input 2 51: User defined failure input 3 52: User defined failure input 4 53~63: Reserved		
P05.10	HDI1 Terminal Function Selection	0: HS pulse input 1: Switch signal input	0	◎
P05.11	Digit Input Polarity Selection	0x000~0x1FF: bit0~bit8 corresponding with DI1~DI5, DHI1, DI7~DI9 binary digit set value function: 0: Switch closed effective 1: Switch open effective	0x000	◎
P05.12	DI Filter Time	0.000s~1.000s	0.010s	○
P05.13	Low Limited of AI1	-10.00V~P05.15	0.00V	○

	Voltage			
P05.14	Corresponding Setting of AI1 Lower Limit	-100.0%~100.0%	0.0%	○
P05.15	Upper Limit of AI1 Voltage	P05.13~10.00V	10.00V	○
P05.16	Corresponding Setting of AI1 Upper Limit	-100.0%~100.0%	100.0%	○
P05.17	AI1 Input Filter Time	0.000s~10.000s	0.100s	○
P05.18	AI2 Input Type Selection	0: Voltage input type 1: Current input type	0	○
P05.19	Lower Limit of AI2 Voltage	-10.00V~P05.21	0.00V	○
P05.20	Corresponding Setting of AI2 Voltage Lower Limit	-100.0%~100.0%	0.0%	○
P05.21	Upper Limit of AI2 Voltage	P05.19~10.00V	10.00V	○
P05.22	Corresponding Setting of AI2 Voltage Upper Limit	-100.0%~100.0%	100.0%	○
P05.23	Lower Limit of AI2 Current	-20.00mA~P05.25	0.00mA	○
P05.24	Corresponding Setting of AI2 Current Lower Limit	-100.0%~100.0%	0.0%	○
P05.25	Upper Limit of AI2 Current	P05.23~20.00mA	20.00mA	○
P05.26	Corresponding Setting of AI2 Current Upper Limit	-100.0%~100.0%	100.0%	○
P05.27	AI2 Input Filter Time	0.000s~10.000s	0.100s	○
P05.28	AI3 Input Type Selection	0: Voltage input 1: Current input	0	○
P05.29	Lower Limit of AI3 Voltage	-10.00V~P05.31	0.00V	○
P05.30	Corresponding Setting of AI3 Voltage Lower Limit	-100.0%~100.0%	0.0%	○
P05.31	Upper Limit of AI3 Voltage	P05.29~10.00V	10.00V	○
P05.32	Corresponding Setting of AI3 Voltage	-100.0%~100.0%	100.0%	○

	Upper Limit			
P05.33	Lower Limit of AI3 Current	-20.00mA~P05.35	0.00mA	○
P05.34	Corresponding Setting of AI3 Current Lower Limit	-100.0%~100.0%	0.0%	○
P05.35	Upper Limit of AI3 Current	P05.33~20.00mA	20.00mA	○
P05.36	Corresponding Setting of AI3 Current Upper Limit	-100.0%~100.0%	100.0%	○
P05.37	AI3 Input Filter Time	0.000s~10.000s	0.100s	○
P05.39	Minimum Frequency of High-Speed Pulse Input	0.00kHz~P05.41	0.00kHz	○
P05.40	Corresponding Setting of Minimum Frequency of High-Speed Pulse Input	-100.0%~100.0%	0.0%	○
P05.41	Maximum Frequency of High-Speed Pulse Input	P05.39~100.00kHz	50.00kHz	○
P05.42	Corresponding Setting of Maximum Frequency of High-Speed Pulse Input	-100.0%~100.0%	100.0%	○
P05.43	HS (Pulse) Input Filter Time	0.000s~10.000s	0.000s	○
P05.44	DI1 Terminals Close Delay Time	0.0s~6000.0s	0.0s	○
P05.45	DI1 Terminals Open Delay Time	0.0s~6000.0s	0.0s	○
P05.46	DI2 Terminals Close Delay Time	0.0s~6000.0s	0.0s	○
P05.47	DI2 Terminals Open Delay Time	0.0s~6000.0s	0.0s	○
P05.48	DI3 Terminals Close Delay Time	0.0s~6000.0s	0.0s	○
P05.49	DI3 Terminals Open Delay Time	0.0s~6000.0s	0.0s	○
P05.50	DI4 Terminals Close Delay Time	0.0s~6000.0s	0.0s	○
P05.51	DI4 Terminals Open	0.0s~6000.0s	0.0s	○

	Delay Time			
P05.52	DI5 Terminals Close Delay Time	0.0s~6000.0s	0.0s	○
P05.53	DI5 Terminals Open Delay Time	0.0s~6000.0s	0.0s	○
P05.54	HDI1 Terminals Close Delay Time	0.0s~6000.0s	0.0s	○
P05.55	HDI1 Terminals Open Delay Time	0.0s~6000.0s	0.0s	○
P05.56	DI7 Terminals Close Delay Time	0.0s~6000.0s	0.0s	○
P05.57	DI7 Terminals Open Delay Time	0.0s~6000.0s	0.0s	○
P05.58	DI8 Terminals Close Delay Time	0.0s~6000.0s	0.0s	○
P05.59	DI8 Terminals Open Delay Time	0.0s~6000.0s	0.0s	○
P05.60	DI9 Terminals Close Delay Time	0.0s~6000.0s	0.0s	○
P05.61	DI9 Terminals Open Delay Time	0.0s~6000.0s	0.0s	○
P05.62	Virtual Input Terminal Setting Selection	0: Disabled 1: Communication setting	0	○
P05.63	Travel Switch Lock Time	0.0s~60.0s	1.0s	○
P06 Output Terminal Function Parameter Group				
Function Code	Parameter Name	Setting Range	Factory Default Value	Prop -ety
P06.00	HDO1 Terminals Output Mode Selection	0: HS Pulse output 1: Switch signal output	0	○
P06.02	Digital Output Effective Logical Selection	0x00~0x1F: bit0~bit3 correspond to DO1 HDO1 T1 T2 DO5, binary bit set value function 0: Switch closed 1: Switch open	0x00	○
P06.03	DO1 Digit Output Function	0: Disabled 1: Inverter in running 2: Forward running	0	○
P06.04	HDO1 Digital Output Mode Function		0	○

P06.05	Relay T1 Digit Output Selection	3: Reverse running 4: Jog running 5: Inverter Fault 6: Pre-excitation 7: Ready for run 8: Overload pre-warning 9: Off load pre-warning 10: Frequency level detection FDT1 output 11: Frequency level detection FDT2 output 12: Zero speed running 13: Frequency reached 14: Frequency upper limit reached 15: Frequency lower limit reached 16: Set count value reached 17: Designated count value reached 18: Complete of simple PLC stage 19: Simple PLC circulate complete 20: External equipment fault enabled 21: Accumulative running time reached 22: Accumulative power-on time reached 23: Current running time reached 24: Current power-on time reached 25: Any frequency reached 26: Any current reached 27: Current limit exceeded 28: Communication virtual terminal output 29: Reserved 30: Stop command output 31: Run (non-jog run) 32: Length reached 33: Braking timing output	0	○
P06.06	Relay T2 Output Selection		0	○
P06.07	DO5 Function Select Ion Of Output Terminals (Extension Card)		0	○
P06.08	AO1 Analog Output Function	0: Running frequency (100.0% Corresponding the maximum output frequency) 1: Set frequency (100.0% Corresponding the maximum output frequency) 2: Output current 1 (100.0% Corresponding 2 times of rated motor current) 3: Output voltage1 (100.0% Corresponding 1.5 times of rated inverter voltage) 4: Motor rotational speed (100.0%	0	○
P06.09	AO2 Output Selection		0	○
P06.10	HDO1 Pulse Output Functions		0	○

		Corresponding 2 times of rated motor speed) 5: Output power (100.0% Corresponding 2 times of rated motor power) 6: High speed pulse HDI input value 7: AI1 input value 8: AI2 input value 9: AI3 input value(extension card) 10: Reserved 11: Count value 12: Output torque (100.0% corresponding 2 times of motor rated torque) 13: Output current 2 (0.0A~1000.0A) 14: Output voltage 2 (0.0V~1000.0V) 15: Slope set frequency (100.0% corresponding max output frequency) 16: Communication set value 1 17: Communication set value 2 18~25: Reserved		
P06.11	AO1 Output Voltage (Current) Lower Limit	0.00V~P06.13（0.00mA~P06.13）	0.00V	○
P06.12	Corresponding Setting Value of AO1 Voltage Output (Current) Lower Limit	0.0%~100.0%	0.0%	○
P06.13	AO1 Output Voltage (Current) Upper Limit	P06.11~10.00V（P06.11~20.00 mA）	10.00V	○
P06.14	Corresponding Setting Value of AO1 Output Voltage (Current) Upper Limit	0.0%~100.0%	100.0%	○
P06.15	AO1 Output Filter Time	0.000s~10.000s	0.000s	○
P06.16	AO2 Output Voltage (Current) Lower Limit	0.00V~P06.18（0.00mA~P06.18）	0.00V	○
P06.17	Corresponding Setting Value of AO2 Output Voltage (Current) Lower Limit	00.0%~100.0%	0.0%	○
P06.18	AO2 Output Voltage (Current) Upper Limit	P06.16~10.00V（P06.16~20.00 mA）	10.00V	○
P06.19	Corresponding Setting Value of AO2 Voltage (Current) Upper Limit	0.0%~100.0%	100.0%	○
P06.20	AO2 Output Filter	0.000s~10.000s	0.000s	○

	Time			
P06.21	HDO1 Output Voltage (Current) Lower Limit	0.0%~P06.23	0.0%	○
P06.22	Lower Limit Corresponding HDO1 Output	0.00kHz~100.00kHz	0.0kHz	○
P06.23	HDO1 Output Upper Limit	P06.21~100.0%	100.0%	○
P06.24	Upper Limit Corresponding HDO1 Output	0.00kHz~100.00kHz	50.00kHz	○
P06.25	HDO1 Output Filter Time	0.000s~10.000s	0.000s	○
P06.26	DO1 Terminals Closed Delay	0.0s~6000.0s	0.0s	○
P06.27	DO1 Terminals Open Delay	0.0s~6000.0s	0.0s	○
P06.28	HDO1 Terminals Close Delay	0.0s~6000.0s	0.0s	○
P06.29	HDO2 Terminals Open Delay	0.0s~6000.0s	0.0s	○
P06.30	Relay T1 Close Delay	0.0s~6000.0s	0.0s	○
P06.31	Relay T1 Open Delay	0.0s~6000.0s	0.0s	○
P06.32	Relay T2 Close Delay	0.0s~6000.0s	0.0s	○
P06.33	Relay T2 Open Delay	0.0s~6000.0s	0.0s	○
P06.34	DO5 Terminals Close Delay	0.0s~6000.0s	0.0s	○
P06.35	DO5 Terminals Open Delay	0.0s~6000.0s	0.0s	○
P07 AIAO Correction Group				
Function Code	Parameter Name	Setting Range	Factory Default Value	Prop -erty
P07.00	AI1 Measured Voltage 1	0.500V～4.000V	Factory Correction	○
P07.01	AI1 Displayed Voltage 1	0.500V～4.000V	Factory Correction	○
P07.02	AI1 Measured Voltage 2	6.000V～9.999V	Factory Correction	○
P07.03	AI1 Displayed Voltage 2	6.000V～9.999V	Factory Correction	○

P07.04	AI2 Measured Voltage 1	0.500V～4.000V	Factory Correction	○
P07.05	AI2 Displayed Voltage 1	0.500V～4.000V	Factory Correction	○
P07.06	AI2 Measured Voltage 2	6.000V～9.999V	Factory Correction	○
P07.07	AI2 Displayed Voltage 2	6.000V～9.999V	Factory Correction	○
P07.08	AI3 Measured Voltage 1	0.500V～4.000V	Factory Correction	○
P07.09	AI3 Displayed Voltage 1	0.500V～4.000V	Factory Correction	○
P07.10	AI3 Measured Voltage 2	6.000V～9.999V	Factory Correction	○
P07.11	AI3 Displayed Voltage 2	6.000V～9.999V	Factory Correction	○
P07.12	AO1 Target Voltage 1	0.500V～4.000V	Factory Correction	○
P07.13	AO1 Measured Voltage 1	0.500V～4.000V	Factory Correction	○
P07.14	AO1 Target Voltage 2	6.000V～9.999V	Factory Correction	○
P07.15	AO1 Measured Voltage 2	6.000V～9.999V	Factory Correction	○
P07.16	Target Voltage 1 Of AO2	0.500V～4.000V	Factory Correction	○
P07.17	AO2 Measured Voltage 1	0.500V～4.000V	Factory Correction	○
P07.18	AO2 Target Voltage 2	6.000V～9.999V	Factory Correction	○
P07.19	AO2 Measured Voltage 2	6.000V～9.999V	Factory Correction	○
P08 Process PID Control Parameters Group				
Function Code	Parameter Name	Setting Range	Factory Default Value	Prop -erty
P08.00	PID Command Source	0: Function code P08.01 1: AI1 2: AI2 3: AI3(extension card) 4: HS pulse input 5: MS speed command 6: Communication setting	0	○

		7: Keypad potentiometer		
P08.01	PID Command Set Value	0.0%~100.0%	50.0%	○
P08.02	PID Command UP/DOWN Time	0.00s~100.00s	0.00S	○
P08.03	PID Feedback Source	0: AI1 1: AI2 2: AI3(extension card) 3: AI1-AI2 4: AI1+AI2 5: MAX(AI1，AI2) 6: MIN(AI1，AI2) 7: HS Pulse input setting 8: Communication setting 9: Internal current feedback	0	○
P08.04	PID Output Feature Selection	0: PID output positive feature 1: PID output negative feature	0	○
P08.05	PID Feedback Display Coefficient	0.00~655.35 (Users define)	1.00	○
P08.06	Proportional Gain 1	0.00~100.00	40.0	○
P08.07	Integral Time 1	0.00: Disabled integral 0.01s~10.00s	0.50s	○
P08.08	Differential Time 1	0.000s~10.000s	0.000s	○
P08.09	Proportional Gain 2	0.00~100.00	40.00	○
P08.10	Integral Time 2	0.00: Disabled integral 0.01s~10.00s	0.50s	○
P08.11	Differential Time 2	0.000s~10.000s	0.000s	○
P08.12	PID Parameter Switchover Condition	0: No switchover(only use PID parameter 1) 1: DI terminals 2: According to deviation auto-switchover	0	○
P08.13	PID Parameter Switchover Deviation 1	0.0%~100.0%	20.0%	○
P08.14	PID Parameter Switchover Deviation 2	0.0%~100.0%	80.0%	○
P08.15	PID Deviation Limit	0.0%~100.0%	0.0%	○
P08.16	PID Preset Output Mode	0: No preset output mode	0	◎

		1: Output according to holding time 2: Output when PID feedback< switchover threshold 3: Output when PID feedback> switchover threshold		
P08.17	PID Preset Output Value	0.0%~100.0% (as frequency command relative to max output frequency P00.07)	10.0%	○
P08.18	PID Preset Output Value Holding Time	0.00s~600.00s	0.50s	○
P08.19	PID Preset Output Switchover Threshold	0.0%~100.0% (relative to PID command value)	50.0%	○
P08.20	Feedback Wire-break Detection Value	0.0%: No detection 0.1%~100.0%	0.0%	○
P08.21	Feedback Wire-break Detection Time	0.0s~20.0s	0.0s	○
P08.22	Feedback Over-limit Detect Value	0.0%: No detection 0.1%~100.0%	0.0%	○
P08.23	Feedback Over-limit Detection Time	0.0s~20.0s	0.0s	○
P08.24	PID Dormant Threshold	P08.25~100.0%（PID feedback range） 100%: Cancel the sleep function	100.0%	○
P08.25	PID Wakeup Threshold	0.0%~ P08.24（PID feedback range）	0.0%	○
P08.26	PID Dormant Waiting Time	0.0s~6000.0s	1.0s	○
P08.27	PID Wakeup Waiting Time	0.0s~6000.0s	0.5s	○
P08.28	PID Calculation Mode	0: Stop no calculation 1: Stop calculation	0	○
P08.29	PID Output Positive Max Value	0.0%~100.0%	100.0%	○
P08.30	PID Output Reverse Max Value	0.0%~100.0%	0.0%	○
P08.31	PID Feed-forward Source Selection	0: No feed-forward 1: AI1 2: AI2 3: AI3(extension card) 4: HS pulse 5: Communication	0	○
P08.32	PID Feed-forward Gain	0.00~60.00	1.00	○

P08.33	PID Positive Output Maximum Variation	0.0%: No limited 0.1%~100.0%	2.0%	○
P08.34	PID Output Reverse Maximum Variation	0.0%: No limited 0.1%~100.0%	2.0%	○
P08.36	PID Adjust Selection	0: Continue integration arriving upper and lower limit 1: Stop integration arriving upper and lower limits	0	○
P08.37	Feedback Lower Limit when PID Action	0.0%: Unlimited 1%~100%	0.0%	○
P08.38	PID Computing Benchmark (Not Including Feed forward)	0: Relative to feed forward amount 1: Relative to 100%	1	◎
P08.39	PID Output Range (Not Including Feed forward)	0.0: Unlimited 0.1~150%	100%	○
P08.40	Lower Limit Frequency of Feedback Break Line Detection	0.00~50.00Hz	10.00	○

P09 Special Function Parameters Group

Function Code	Parameter Name	Setting Range	Factory Default Value	Prop -erty
P09.00	Jog Running Frequency	0.00Hz~P00.07 (max output frequency)	5.00Hz	○
P09.01	Jog Running Acceleration Time	0.0s~3600.0s	Model dependent	○
P09.02	Jog Running Deceleration Time	0.0s~3600.0s	Model Dependent	○
P09.03	Acceleration Time 1	0.0s~3600.0s	Model Dependent	○
P09.04	Deceleration Time1	0.0s~3600.0s	Model Dependent	○
P09.05	Acceleration Time 2	0.0s~3600.0s	Model Dependent	○
P09.06	Deceleration Time2	0.0s~3600.0s	Model Dependent	○
P09.07	Acceleration Time 3	0.0s~3600.0s	Model	○

			Dependent	
P09.08	Deceleration Time 3	0.0s~3600.0s	Model dependent	○
P09.09	Set Frequency Reaching Detection Amplitude	0.00Hz~P00.07（maximum output frequency）	0.00Hz	○
P09.10	Frequency Detection Value 1 (FDT1)	0.00Hz~P00.07（maximum output frequency）	50.00Hz	○
P09.11	Frequency Detection 1 Hysteresis Value	0.0%~100.0%（relative to FDT1）	5.0%	○
P09.12	Frequency Detection Value 1 (FDT2)	0.00Hz~P00.07（maximum output frequency）	50.00Hz	○
P09.13	Frequency Detection 2 Hysteresis Value	-100.0%~100.0%（relative to FDT2）	5.0%	○
P09.14	Swing Set Mode	0: Relative to the central frequency	0	●
P09.15	Swing Frequency Amplitude	0.0%: Close swing frequency function 0.1%~100.0%	0.0%	○
P09.16	Jump Frequency Amplitude	0.0%~50.0%	0.0%	○
P09.17	Swing Frequency Rise Time	0.0s~3000.0s	5.0s	○
P09.18	Swing Frequency Fall Time	0.0s~3000.0s	5.0s	○
P09.19	Jump Frequency 1	0.00Hz~P00.07 (max output frequency)	0.00Hz	○
P09.20	Jump Frequency Amplitude 1	0.00Hz~P00.07 (max output frequency)	0.00Hz	○
P09.21	Jump Frequency 2	0.00Hz~P00.07 (max output frequency)	0.00Hz	○
P09.22	Jump Frequency Amplitude 2	0.00Hz~P00.07 (max output frequency)	0.00Hz	○
P09.23	Jump Frequency Amplitude 3	0.00Hz~P00.07(max output frequency)	0.00Hz	○
P09.24	Jump Frequency Amplitude 3	0.00Hz~P00.07(max output frequency)	0.00Hz	○
P09.27	Set Count Value	P09.28~65535	1000	○
P09.28	Designated Count Value	1~P09.27	500	○
P09.29	Droop Control Frequency Drop Rate	0.00Hz~10.00Hz	0.00Hz	○
P09.30	Accumulative Running Time Reached	0h~65535h	0h	○

P09.31	Accumulative Power-On Time Reached	0h~65535h	0h	○
P09.32	Current Running Time Reached	0min~65535min	0min	○
P09.33	Current Power-On Time Reached	0min~65535min	0min	○
P09.34	Any Frequency Reaching	0.00Hz~P00.07 (max output frequency)	0.00	○
P09.35	Any Frequency Reaching Detection Amplitude	0.00Hz~P09.34	0.00	○
P09.36	Any Current Reaching	0.0%~300.0%	0.0%	○
P09.37	Any Current Reaching Detection Amplitude	0.0%~P09.36	0.0%	○
P09.38	Electricity Consumption Initial Value Upper Bit	0 kwh~60000kwh	0kwh	○
P09.39	Electricity Consumption Initial Value Lower Bit	0 wh~999.9wh	0.0wh	○
P09.40	Inverter Input Power Factor	0.00~1.0	0.86	○
P09.41	Keypad ^/V Fine Tuning Frequency and JOG/REV Fast Frequency Set	0x0000~0x1221 LED unit's digit: frequency control selection 0: Adjusting enabled 1: Keypad adjusting disabled LED ten's digit bit: frequency control selection 0: Only enabled when P00.02=1 or P00.03=1 1: All frequency mode are enabled 2: MS speed in priority, disabled for MS speed LED the hundred: stop action selection 0: Setup enabled 1: Enabled in run, clear after stop 2: Enabled in run, clear upon receiving stop command LED the thousand" ^/v key integration function 0: Integration function enabled 1: Integration function disabled	0x0000	○

P09.42	^/V Key Integration Rate	0.01s~10.0s	1.0s	○
P09.43	UP/DOWN Terminals Control Set	0x000~0x221 LED unit's digit: frequency control selection 0: UP/DOWN terminals setting enabled 1: UP/DOWN terminals setting Disabled LED ten's digit: frequency control selection 0: Only enabled when P00.02=1or P00.03=1 1: All frequency mode are enabled 2: When the multi-step speed are priority, it is disabled to the multi-step speed LED hundred's digit: action selection when stop 0: Setting enabled 1: Enabled in run , clear after stop 2: Enabled in run , clear upon receiving stop command	0x000	○
P09.44	UP/DOWN Terminals Change Rate	0.01Hz/s ~50.0Hz/s	1.00Hz/s	○
P09.45	Frequency Setting At Power Loss Action Selection	0x000~0x111 LED unit's digit: action selection when digital adjustment frequency with power off 0: Save when power off 1: Clear when power off LED ten's digit: action selection when Modbus setting frequency power off 0: Save when power off 1: Clear when power off LED the hundred: action selection when other Communication set frequency power off 0: Save when power off 1: Clear when power off	0x000	○
P09.46	PWM Selection	0x00~0x21 LED unit's digit: PWM mode selection 0: PWM mode 1, PWM mode1, 3phase modulation and 2phase -modulation 1: PWM mode2, three-phase modulation LED ten's digit: PWM low speed carrier limit 0: Low speed carrier limit, carrier limit mode 1	0x01	◎

		1: Low speed carrier limit, carrier limit mode 2 2: Low speed carrier no-limit		
P09.47	Zero Frequency Output Selection	0: No voltage output 1: Voltage output 2: According to the stop DC braking current output	0	○
P09.48	Action after Accumulative Power-On and Run Time Reached	0: Output terminals action ，Error alarm 1: Output terminals action, no error alarm	0	○
P09.49	Motor Power Correction Coefficient	0.00%~200.0%	100.0%	○
P09.50	User-Defined Fault Selection	LED unit's digit 0: Disabled run after fault 1: Jog running after fault LED ten's digit 0: Coast to stop 1: Decelerate to stop	0x00	○
P09.55	Jog Preferred Selection	0: Enabled 1: Disabled	0	○
P09.56	Auto-start Selection after Manual Reset	0: Disabled 1: Enabled	0	○
P09.57	Stop brake Frequency	0.00Hz~50.00Hz	1.50Hz	○
P09.58	Stop brake Time	0.0s~60.0s	2.0s	○
P10 Keyboard and Display Parameters Group				
Function Code	Parameter Name	Setting Range	Factory Default Value	Prop -erty
P10.00	STOP/RESET Key Stop Function	0: Only enabled to keyboard control panel 1: Enabled to control panel and terminals at the same time 2: Enabled to control panel and communication at the same time 3: Enabled to all control mode	0	○
P10.01	REV/JOG Key Function	0: No function 1: Jog running 2: FWD/REV switchover 3: Coast to stop 4: Clear up/down & ^/v key setup	1	◎

		frequency 5: Shift key switchover display state 6: Realize run command pre-set mode according to sequence switchover 7: Quick debugging mode(according to factory parameter debugging) 8: Modify rapidly set frequency		
P10.02	JOG/REV Key Run Command Channel Switchover Sequential Selection	0: Keyboard control←→ terminal control 1: Keyboard control --communication control 2: Terminal control ←→communication control 3: Keyboard control →terminals Control →communication control	3	○
P10.03	Display Running Lower Bit	0x0000~0xFFFF BIT0: Running frequency (Hz light on) BIT1: Sett frequency(Hz flash) BIT2: Bus voltage(V light on） BIT3: Output voltage(V light on) BIT4: Output current(A light on) BIT5: Run speed(RPM on） BIT6: Output power(% light on) BIT7: Output torque (% light on) BIT8: PID setting value (% flash） BIT9: PID Feedback value(% light on) BIT10: State of input terminals BIT11: State of output terminals BIT12: Torque setting value (% light on) BIT13: Pulse counting value BIT14: PLC current stage in multi stage-speed BIT15: Slope frequency setting value(Hz light on)	0x003F	○
P10.04	Operation Display Upper Bit	0x0000~0xFFFF BIT0: Analog AI1 value（V light on） BIT1: Analog AI2 value（V light on） BIT2: Analog AI3 value(extension card) (V light on) BIT3: HS pulse HDI frequency BIT4: Motor overload percentage(% light on) BIT5: Inverter overload percentage(% light on) BIT6: Reserved	0x0000	○

		BIT7: Excitation current (A light on） BIT8: Torque current (A light on） BIT9: AC input current (A light on) BIT10: User-defined speed 1(running value) BIT11: User-defined speed 2(running value) BIT12~BIT15: Reserved		
P10.05	Display Stop	0x0000~0xFFFF BIT0: Set frequency (Hz flash） BIT1: Bus voltage (V light on） BIT2: State of input terminals BIT3: State of output terminals BIT4: PID setting value (% flash） BIT5: PID Feedback value (% on) BIT6: Torque setting value (% on） BIT7: Analog AI1 (V light on） BIT8: Analog AI2 (V light on） BIT9: Analog AI3 (extension card) (V light on) BIT10: High speed pulse HDI frequency BIT11: PLC present stage of multi stage speed BIT12: Pulse counting value BIT13: User-defined speed 1(setting value) BIT14: User-defined speed 2(setting value) BIT15: Reserved	0x0003	○
P10.06	User-Defined Speed 1 Coefficient	0.00~60.00 User-defined speed= Running frequency*P10.06	1.00	○
P10.07	User-Defined Speed 2 Coefficient	0.00~60.00 User-defined speed=mechanic RPM*P10.07	1.00	○

P11 MS Speed and Simple PLC Parameters Group				
Function Code	Parameter Name	Setting Range	Factory Default Value	Prop -erty
P11.00	Multi-reference 0	-100.0%~100.0%	0.0%	○
P11.01	Multi-reference 1	-100.0%~100.0%	0.0%	○
P11.02	Multi-reference 2	-100.0%~100.0%	0.0%	○

P11.03	Multi-reference 3	-100.0%~100.0%	0.0%	○
P11.04	Multi-reference 4	-100.0%~100.0%	0.0%	○
P11.05	Multi-reference 5	-100.0%~100.0%	0.0%	○
P11.06	Multi-reference 6	-100.0%~100.0%	0.0%	○
P11.07	Multi-reference 7	-100.0%~100.0%	0.0%	○
P11.08	Multi-reference 8	-100.0%~100.0%	0.0%	○
P11.09	Multi-reference 9	-100.0%~100.0%	0.0%	○
P11.10	Multi-reference 10	-100.0%~100.0%	0.0%	○
P11.11	Multi-reference 11	-100.0%~100.0%	0.0%	○
P11.12	Multi-reference 12	-100.0%~100.0%	0.0%	○
P11.13	Multi-reference 13	-100.0%~100.0%	0.0%	○
P11.14	Multi-reference 14	-100.0%~100.0%	0.0%	○
P11.15	Multi-reference 15	-100.0%~100.0%	0.0%	○
P11.16	Simple PLC	0: Stop after the inverter runs one cycle 1: Keep final value after the inverter runs one cycle 2: Repeat after the inverter runs one cycle	0	○
P11.17	PLC Restart Mode Selection	0: Restart from reference 1 1: Restart from the stage of interruption time frequency	0	○
P11.18	Simple PLC Retentive	0: Retentive at power failure 1: Non- retentive at power failure	0	○
P11.19	MS Time Unit Setup	0: S (second) 1: Min (minute)	0	◎
P11.20	Time of Reference 0	0.0s（h）~6000.0s（h）	0.0s	○
P11.21	Acceleration/Deceleration Time of Reference 0	0~3	0	○
P11.22	Time of Reference 1	0.0s（h）~6000.0s（h）	0.0s	○
P11.23	Acceleration/Deceleration Time of Reference 1	0~3	0	○
P11.24	Time of Reference 2	0.0s（h）~6000.0s（h）	0.0s	○
P11.25	Acceleration/Deceleration Time of Reference 2	0~3	0	○

P11.26	Time of Reference 3	0.0s（h）~6000.0s（h）	0.0s	○
P11.27	Acceleration/Deceleration Time of Reference 3	0~3	0	○
P11.28	Time of Reference 4	0.0s（h）~6000.0s（h）	0.0s	○
P11.29	Acceleration/Deceleration Time of Reference 4	0~3	0	○
P11.30	Time of Reference 5	0.0s（h）~6000.0s（h）	0.0s	○
P11.31	Acceleration/Deceleration Time of Reference 5	0~3	0	○
P11.32	Time of Reference 6	0.0s（h）~6000.0s（h）	0.0s	○
P11.33	Acceleration/Deceleration Time of Reference 6	0~3	0	○
P11.34	Time of Reference 7	0.0s（h）~6000.0s（h）	0.0s	○
P11.35	Acceleration/Deceleration Time of Reference 7	0~3	0	○
P11.36	Time of Reference 8	0.0s（h）~6000.0s（h）	0.0s	○
P11.37	Acceleration/Deceleration Time of Reference 8	0~3	0	○
P11.38	Time of Reference 9	0.0s（h）~6000.0s（h）	0.0s	○
P11.39	Acceleration/Deceleration Time of Reference 9	0~3	0	○
P11.40	Time of Reference 10	0.0s（h）~6000.0s（h）	0.0s	○
P11.41	Acceleration/Deceleration Time of Reference 10	0~3	0	○
P11.42	Time of Reference 11	0.0s（h）~6000.0s（h）	0.0s	○
P11.43	Acceleration/Deceleration Time of Reference 11	0~3	0	○
P11.44	Time of Reference 12	0.0s（h）~6000.0s（h）	0.0s	○
P11.45	Acceleration/Deceleration Time of Reference 12	0~3	0	○
P11.46	Time of Reference 13	0.0s（h）~6000.0s（h）	0.0s	○

P11.47	Acceleration/Deceleration Time of Reference 13	0~3	0	○
P11.48	Time of Reference 14	0.0s（h）~6000.0s（h）	0.0s	○
P11.49	Acceleration/Deceleration Time of Reference 14	0~3	0	○
P11.50	Time of Reference 15	0.0s（h）~6000.0s（h）	0.0s	○
P11.51	Acceleration/Deceleration Time of Reference 15	0~3	0	○
P11.52	Acceleration/Deceleration Time of Multi-stage Speed	0: Function code to determine 1: Terminal to determine	0	○
P12 Reserved				
P13 Protection Parameters Group				
Function Code	Parameter Name	Setting Range	Factory Default Value	Prop-erty
P13.00	Motor1 Overload Protection Selection	0: Disabled 1: Ordinary motor(with low speed compensation) 2: Variable frequency motor (without low speed compensation)	2	○
P13.01	Motor1 Overload Protection Coefficient	20.0%~200.0%	100.0%	○
P13.02	Motor2 Overload Protection Selection	0: Disabled 1: Ordinary motor(with low speed compensation) 2: Various frequency inverter(without low speed compensation)	2	○
P13.03	Motor2 Overload Protection Coefficient	20.0%~200.0%	100.0%	○
P13.04	Inverter or Motor Overload Warning Detection level	50%~200%	G: 150% P: 120%	○
P13.05	Inverter or Motor Overload Warning Detection Time	0.0s~3600.0s	1.0s	○
P13.06	Inverter or Motor Offload Warning Detection level	0%~P13.04	50%	○
P13.07	Inverter or Motor Offload Warning Detection Time	0.0s~3600.0s	1.0s	○

P13.08	Inverter or Motor Overload/Offload Warning Selection	0x000~0x131 Led unit's digit: 0: Motor overload/offload warning, relative to the rated current of the motor 1: Inverter overload/offload warning, relative to the rated current of inverter Led ten's digit: 0: Inverter continues to work after overload/offload warning 1: Inverter continues to work after offload warning and stop to run after overload warning 2: Inverter continues to work after overload alarm and stop to run after offload warning 3: Inverter stops after offload/overload warning Led hundred's digit: 0: Detection all the time 1: Detection in the constant speed run		0x000	○
P13.09	Output Over-current Detection Value	0.0%: No detection 0.1%~300.0%		0.0%	○
P13.10	Output Over-current Detection Time	0.0s~100.0s		0.0s	○
P13.11	Output Over-current Action	0: Terminal output 1: Terminal output, alarm Er016 2: Terminal output, alarm Er016 when constant speed run 3: Terminal output in the constant speed run		0	○
P13.12	Overvoltage Stall Protective	0: Disabled 1: Enabled		1	○
P13.13	Overvoltage Stall Protective Voltage	120%~150%（standard bus voltage）(380V)		140%	○
		120%~150%（standard bus voltage）(220V)		120%	
P13.14	Dynamic Braking Enable	0: Disabled 1: Enabled		1	○
P13.15	Dynamic Braking Voltage	200.0VDC~2000.0VDC	220VAC corresponding: 380.0VDC		○
			380VAC corresponding: 700.0VDC		

P13.16	Current Limit Selection	0x00~0x11 Led unit's digit: current limiting action selection 0: Current limiting action disabled 1: Current limiting action enabled Led ten's digit: hardware current limiting overload alarm selection 0: Hardware current limiting overload alarm enabled 1: Hardware current limiting overload alarm disabled	0x01	◎
P13.17	Automatic Current Limit Level	50.0%~200.0%	G type: 160.0% P type: 120.0%	◎
P13.18	Frequency Decrease Rate when Current Limiting	0.00Hz/s ~50.00Hz/s	10.00Hz/s	◎
P13.19	Phase Loss Protection	0x00~0x11 Led unit's digit: 0: Input phase loss protection disabled 1: Input phase loss protection enabled Led ten's digit: 0: Output phase loss protection disabled 1: Output phase loss protection enabled Instruction: the machine less than 11kW doesn't have input phase loss protection	0x11	○
P13.20	Frequency Reduction Function Selection when an Instantaneous Power Failure	0: Disabled 1: Enabled	0	○
P13.21	Frequency Reduction Mode Selection when an Instantaneous Power Failure	0~1	0	○
P13.22	Frequency Decrease Rate when an Instantaneous Power Failure (P13.21=0 Enabled)	0.00Hz/s~50.00Hz/s	10.00Hz/s	○
P13.23	Deceleration Time when an Instantaneous Power Failure (P13.21=1 Enabled)	0.0s~600.0s	5.0s	○

P13.24	Estimate Voltage when an Instantaneous Power Failure	200.0VDC~600.0VDC	380VAC corresponding: 420.0VDC	○
			220VAC corresponding: 240.0VDC	○
P13.25	Short-circuit to Ground Upon Power-on	0: Enabled 1: Disabled	0	○
P13.26	Fault Output Terminals Action Selection during Fault	0x00~0x11 Led unit's digit: 0: Action upon under-voltage error 1: No action upon under-voltage error Led ten's digit: 0: Action during auto reset 1: No action during auto reset	0x00	○
P13.27	Fault Auto Reset Time	0~20	0	○
P13.28	Time Interval of Fault Reset	0.1s~3600.0s	1.0s	○
P13.29	Fan Start Mode	0: Automatic control 1: Fan keep run	0	○
P13.30	Automatic Frequency Reduction Selection when Voltage Reduction	0: Disabled 1: Enabled	0	○
P13.31	Automatic Frequency Reduction Point when Voltage Reduction	200.0VDC~600.0VDC	380VAC corresponding: 513.0VDC	○
			220VAC corresponding: 297.0VDC	
P13.32	Emergency Stop Time	0.0s~3600.0s	5.0s	○

Group P14 : Fault Record Parameters Group

Function Code	Parameter Name	Setting Range	Factory Default Value	Prop -erty
P14.00	Fault Record Selection	0~3 (0: current fault，1: Last fault，ID is larger, the earliest failure)	0	○

P14.01	Fault Code	0: No fault Er001: Acceleration run over current (hardware) Er002: Deceleration run over current (hardware) Er003: Constant speed run over current (hardware) Er004: Acceleration run over current (software) Er005: Deceleration run over current(software) Er006: Constant speed run over current(software) Er007: Acceleration run overvoltage Er008: Deceleration run overvoltage Er009: Constant speed run overvoltage Er010: Bus under voltage Er011: Motor overload Er012: Inverter overload Er013: Input side phase loss Er014: Output side phase loss Er015: Module overheat Er016: Current over-limit fault Er017: External fault Er018: Communication fault Er019: Current detection circuit fault Er020: Motor self-learning fault Er021: EEPROM read-write fault Er022: PID feedback over limit fault Er023: PID feedback break line fault Er024: Short circuit to ground upon power on Er025: Breaking unit fault Er026: Reserved Er027: Running time reached Er028: power-on time reached Er029: Offload Er030~Er033: Reserved Er034: Overheat Er035: Reserved Er036: Electronic overload Er037~ Er040: Reserved Er041: User-defined fault 1 Er042: User-defined fault 2 Er043: User-defined fault 3	0	●

		Er044: User-defined fault 4 Er045~ Er059: Reserved Er060: Manufacturer defined fault 1 Er061: Manufacturer defined fault 2 Er090: Keypad communication fault (keypad CPU error) Er091: Parameters upload fault (keypad CPU error) Er092: Parameters download fault (keypad CPU error)		
P14.02	Run Frequency upon Fault	0.00hz~650.00Hz	0.00Hz	●
P14.03	Current Upon Fault	0.0a~2000.0A	0.0A	●
P14.04	Output Voltage upon Fault	0v~2000V	0V	●
P14.05	Bus Voltage upon Fault	0.0v~2000.0V	0.0V	●
P14.06	Input Terminal State upon Fault	0x000~0x1FF	0x000	●
P14.07	Output Terminal State upon Fault	0x00~0x1F	0x00	●
P14.08	Inverter Temperate upon Fault	-20.0°c~120.0°C	0.0°C	●
P14.09	Run Time upon Fault	0min~65535min	0min	●
P14.10	Power-On Time upon Fault	0min~65535min	0min	●
P14.11	Accumulative Running Time upon Fault	0h~65535h	0h	●
P14.12	Accumulative Power-On Time upon Fault	0h~65535h	0h	●

P15 Modbus Communication Parameter Group

Function Code	Parameter Name	Setting Range	Factory Default Value	Prop -erty
P15.00	Communication Protocol Selection	0: Modbus	0	●
P15.01	Local Address	0: Broadcast address 1~247: Slave address	1	○
P15.02	Baud Rate	0: 1200bps 1: 2400bps	3	○

		2: 4800bps 3: 9600bps 4: 19200bps 5: 38400bps 6: 57600bps 7: 115200bps		
P15.03	Data Format	0: No verify（N，8，1），for RTU 1: Even verify（E，8，1）, for RTU 2: Odd verify（O，8，1），for RTU 3: No verify（N，8，2），for RTU 4: Even verify（E，8，2），for RTU 5: Odd verify（O，8，2），for RTU	0	○
P15.04	Response Delay	0ms~200ms	5ms	○
P15.05	Communication Timeout Detection Time	0.0s: No detection 0.1s~100.0s	0.0s	○
P15.06	Communication Timeout Error Handling	0: Alarm and coast to stop 1: No alarm and continue to run 2: No alarm and stop according to the stop mode(only under the communication control mode) 3: No alarm and stop according to the stop mode (under all control mode)	0	○
P15.07	Communication Processing Action Selection	0x00~0x11 Led unit's digit: 0: Write with responds 1: Write without responds Led ten's digit: 0: Communication encrypting no limit 1: Communication encrypting with limit	0x00	○
P15.08	Communication to Modify P00.01 Selection	0: Enable modify 1: Disable modify	1	○

P20 Motor 2 Parameters Group				
Function Code	Parameter Name	Setting Range	Factory Default Value	Prop -erty
P20.00	Motor 2 Type Selection	0: Asynchronous motor	0	●
P20.01	Rated Motor 2 Power	0.4kW~1000.0kW	Model dependent	◎

P20.02	Rated Motor 2 Voltage	0V~1500V	Model Dependent	◎
P20.03	Rated Motor 2 Current	0.0A~2000.0A	Model Dependent	◎
P20.04	Rated Motor 2 Frequency	0.00Hz~650.00Hz	Model Dependent	◎
P20.05	Rated Motor 2 Rotation Speed	0RPM~65535RPM	Model dependent	◎
P20.06	Motor 2 Stator Resistance	0.000Ω~65.535Ω	Model dependent	○
P20.07	Motor 2 Rotor Resistance	0.000Ω~65.535Ω	Model dependent	○
P20.08	Motor 2 Stator and Rotor Leakage Inductance	0.0mH~6553.5mH	Model dependent	○
P20.09	Motor 2 Stator and Rotor Mutual Inductance	0.0mH~6553.5mH	Model dependent	○
P20.10	Motor 2 No-load Current	0.0A~P20.03(rate motor 2 current)	Model dependent	○
P21 Motor 2 V/F Control Group				
Function Code	Parameter Name	Setting Range	Factory Default Value	Prop -erty
P21.00	Motor 2 V/F Curve Setting	0: Straight line V/F curve 1: Multi-stage V/F curve 2: 1.3#power lower torque V/F curve 3: 1.7# power lower torque V/F curve 4: 2.0# power lower torque V/F curve 5: V/F complete separation 6: V/F half separation	0	◎
P21.02	Motor 2 V/F Frequency Point 1	0.00Hz~P21.04	0.00Hz	○
P21.03	Motor 2V/F Voltage Point 1	0.0%~110.0% (rated voltage of motor 2	0.0%	○
P21.04	Motor 2 V/F Frequency Point 2	P21.02~ P21.06	0.00Hz	○
P21.05	Motor 2 V/F Voltage Point 2	0.0%~110.0% (rated motor 2 voltage)	0.0%	○

P21.06	Motor 2V/F Frequency Point 3	P21.04~ P00.07	0.00Hz	○
P21.07	Motor 2 V/F Voltage Point 3	0.0%~110.0% (rated motor 2 voltage)	0.0%	○
P21.08	Motor 2 V/F Slip Compensation Gain	0.0%~200.0%	100.0%	○
P21.09	Motor 2 Torque Boost	0.0%: Auto torque boost 0.1%~10.0%	0.0%	○
P21.10	Motor 2 Torque Boost Cut Off	0.0%~50.0% (relate to rated motor 2 frequency)	20.0%	○
P21.11	Low Frequency Suppression Oscillation Factor of Motor 2	0~100	10	○
P21.12	High Frequency Suppression Oscillation Factor of Motor 2	0~100	10	○
P21.13	Suppression Oscillation Threshold of Motor 2	0.00Hz~P00.07（Maximum frequency）	30.00Hz	○
P21.14	Motor 2 Voltage Setting Channel Selection	0: Function code P21.15 1: AI1 2: AI2 3: AI3(extension card) 4: HS Pulse input 5: PID control setting 6: Communication setting	0	◎
P21.15	Motor 2 Keypad Setting Voltage Value	0.0%~100.0%	100.0%	○
P21.16	Motor 2 Voltage Increasing Time	0.0s~3600.0s	5.0s	○
P21.17	Motor 2 Voltage Decreasing Time	0.0s~3600.0s	5.0s	○
P21.18	Motor 2 Maximum Output Voltage	P21.19~100.0%（Rated voltage of motor）	100.0%	◎
P21.19	Motor 2 Minimum Output Voltage	0.0%~P21.18 （Rated voltage of motor）	0.0%	◎
P21.20	Motor 2 V/F Control Weak Magnetic Coefficient	1.00~1.30	1.00	○

P21.21	Energy-Saving Running Selection of Motor 2	0: Disabled 1: Enabled	0	◎
P28 Condition Monitoring Parameters Group				
Function Code	Parameter Name	Setting Range	Factory Default Value	Prop -erty
P28.00	Running Frequency		0.01Hz	●
P28.01	Set Frequency		0.01Hz	●
P28.02	Slope Given Frequency		0.01Hz	●
P28.03	Bus Voltage		0.1V	●
P28.04	Output Voltage		1V	●
P28.05	Output Current		0.1A	●
P28.06	Torque Current		0.1A	●
P28.07	Exciting Current		0.1A	●
P28.08	Output Power Percent		0.1%	●
P28.09	Output Torque		0.1Nm	●
P28.10	Output Torque Percent		0.1%	●
P28.11	Set Torque Percent		0.1%	●
P28.12	Motor Run Speed		1RPM	●
P28.13	Speed Controller Output		0.0%	●
P28.14	DI Input State		1	●
P28.15	DO Input State		1	●
P28.16	AI1 Voltage		0.01V	●
P28.17	AI2 Voltage		0.01V	●
P28.18	AI3 Voltage(Extension Card)		0.01V	●
P28.19	Count Value		1	●
P28.20	Motor Power Factor		0.01	●
P28.21	Magnetic Linkage		0.1%	●
P28.22	PID Setting Value		0.01	●

P28.23	PID Feedback Value		0.01	●
P28.24	PID Output Value		0.1%	●
P28.25	PLC Stage		1	●
P28.26	HS Pulse Input Frequency		0.01kHz	●
P28.27	Current Fault Code		1	●
P28.28	Accumulative Running Time		1h	●
P28.29	Accumulative Power-On Time		1h	●
P28.30	Current Running Time		1min	●
P28.31	Current Power-On Time		1min	●
P28.32	Module Temperature		0.1°C	●
P28.33	Reserved			●
P28.34	Frequency Fine-Tuning		0.01Hz	●
P28.35	AC Input Current		0.1A	●
P28.36	Accumulative Power Consumption Upper Bit		1kwh	●
P28.37	Accumulative Power Consumption Lower Bit		0.1wh	●
P28.38	Length		1	●
P28.39	Accumulative Running Time		1h	●
P28.40	Torque Compensation		0.0%	●
P28.42	PID Feed-forward Part		0.0%	●
P28.43	PID Adjustment Part		0.0%	●
P28.44	PID Proportional Gain		0.00	●
P28.45	PID Integral Time		0.00	●
P28.46	PID Derivative Time		0.00	●

P29 User Parameters Group				
Function Code	Parameter Name	Setting Range	Factory Default Value	Prop -erty
P29.00	User Password	0~65535	0	○
P29.01	Parameter Initialization	0: No operation 1: Restore factory default setup value 2: Clear the fault record 3: Clear accumulative running and power-on time 4: Date upload (inverter to panel) 5: Date download (panel to inverter)	0	◎
P29.02	Product Code	0~65535	Factory Setting	●
P29.03	Software Versioning	1.00~10.00	Factory Setting	●
P29.04	Inverter Rate Power	0.4kW~1000.0kW	Factory Setting	●
P29.05	Inverter Rate Voltage	220V~1140V	Factory Setting	●
P29.06	Inverter Rate Current	2.4A~2000.0A	Factory Setting	●
P29.07	Factory Use			☆
P29.08	Factory Use			☆
P29.09	Factory Use			☆
P29.10	Factory Use			☆
P29.11	Factory Use			☆
P30 Factory Parameters Group				

Chapter 6 Parameter Description

6.1 P00 Basic Function

P00.00	Motor Running Mode	0: V/F control mode 1: Sensor-less vector control mode 0 2: Sensor-less vector control mode 1	0	◎

Select inverter run mode, V/F control mode can be selected by P04.00 or P21.00 parameter to choose linear V/F, MS V/F, curve V/F or V/F separation control.

V/F control mode:

One unit of inverter can work with several units of motor, no need to install encoder. It is adaptive to non-high requirement on dynamic response application, as belt conveyor, textile machinery etc. Vector V/F improve further V/F control performance.

Sensor-less vector control mode 0:

One unit of inverter work with one unit of motor, no need to install encoder. It is adaptive to high performance requirement application, featured with torque precision high and torque response quick.

Sensor-less vector control mode 1:

One unit of inverter work with one unit of motor, no need to install encoder. It is highly adaptive to application, especially when motor power is big and controlling performance is better.

P00.01	Running Command Source	0: Keypad command source (L/R OFF) 1: Terminal command source (L/R ON) 2: Communication command source (L/R flashes)	0	○

Select inverter run command source:

Inverter run command include: start, stop, forward run, reverse run, jog.

Keypad command channel:

Key” RUN, STOP/RESET” on keypad to realize start, stop, fault reset command.

Terminal command channel:

Through multi-function input terminal to realize forward, reverse, forward jogging, reverse jogging etc. control command, refer to P05 function code group.

Communication command channel:

Operation command as setup via HOST PC via communication, refer to P15 function code group.

P00.02	Main Frequency Source A Selection	0: Keypad potentiometer 1: Function code P00.11 2: AI1 3: AI2 4: AI3(extension card) 5: Simple PLC 6: MS speed 7: High speed PULSE input 8: PID control setting 9: Communication setting	0	◎
P00.03	Frequency Command Source B		4	○

Separately choose A, B group frequency command source (note: A, B channel cannot choose the

same frequency command source):

Keypad potentiometer setup:

Via potentiometer on rotating panel to change given frequency, can adjust from 0.00Hz to max output frequency P00.07.

Also via keypad ^/v key or terminal UP/DOWN action to realize frequency command fine tuning, refer to function code P09.41~P09.44.

Function code P00.11 setup:

Via set function code P00.11 directly set target frequency.

AI1, AI2 and AI3 setup (extension card):

Via analog set frequency command, AI1 support voltage input. AI2 and AI3 support voltage or current input. The relation of AI input voltage(current) and set frequency can be set flexible, refer to function code P05.13~P05.37

Simple PLC set:

Via PLC, target frequency can be switch over in 1~16 frequency randomly, the separate run time, acceleration/deceleration time of 1~16 frequency command can be set, refer to function code P11 group.

MS speed command:

Via 4 digits DI input(refer to function code P05) to randomly select one from 16 frequency command as target frequency, refer to function code P11.

HS pulse input set:

Via HDI1 terminal input pulse frequency to set target frequency, support 0.00KHz~100.00KHz pulse input, refer to function code P05.39~P05.43

Communication set:

Frequency set is given by HOST PC communication directly, refer to function code P15 and communication protocol.

PID control setup:

Select process PID control as frequency source, generally used in processing close-loop control, such as pressure close-loop, temperature close-loop, refer to function code P08.

P00.04	Frequency Source Superposition	0: K1*frequency instruction A 1: K2*frequency instruction B 2: K1*frequency instruction A+K2*frequency instruction B 3: K1*frequency instruction A-K2*frequency instruction B 4: MAX（K1*frequency instruction A, K2*frequency instruction B） 5: MIN（K1*frequency instruction A, K2*frequency instruction B） Remark: K1: P00.29 K2: P00.30	0	○

Via P00.04 select A, B frequency channel Superposition mode, to realize complicate frequency command preset:

P00.05	Rang of Frequency Command Source B	0: Relative to maximum frequency 1: Relative to frequency source A	0	○

When B channel work with frequency command integration, through P00.05 and P00.06 to adjust B channel frequency command reference range. If choose frequency source A channel, then frequency source B changes accompanied frequency source A change.

P00.06	Frequency output lower limit after superposition	-100%~100%(100% corresponding to P00.07)	0.0%	◎

P00.06 is used to set the frequency output lower limit after superposition. The value is less than or equal to the upper limit frequency, when the set frequency is lower than the frequency output lower limit after superposition, then operation by lower limit frequency.

P00.07	Maximum Output Frequency	P00.09~650.00Hz	50.00Hz	◎

Max frequency is the reference of all frequency relative quantity, as pulse input, analog terminal, MS speed etc. Each of the percentage is relative to the max output frequency. Such as analog input 10V, change into 100%, relative (100%xP00.07)Hz.

Note: Output frequency of all operation will not exceed max output frequency.

P00.09	Running Frequency Upper Limit	P00.10~P00.07	50.00Hz	○
P00.10	Running Frequency Lower Limit	0.00Hz~P00.09	0.00Hz	○

P00.09 is used to set running frequency upper limit. The value is less or equal to max output frequency, when set frequency is higher than upper limit frequency then it runs with upper limit frequency.

P00.10 is used to set running frequency lower limit. The value is less or equal to upper limit frequency, when set frequency is lower than lower limit frequency and bigger than 0, then P01.20 can be used to setup inverter run mode.

P00.11	Keypad Set Frequency	0.00Hz~P00.07(max output frequency)	50.00Hz	○

When A or B frequency command channel select function code P00.11 setup, this function code value directly used as its channel frequency command.

P00.12	MS Speed Command Stage 0 Command Source	0: Function code P11.00 1: Function code P00.11 2: AI1 3: AI2 4: AI3(extension card) 5: High speed pulse 6: PID control set 7: Keypad potentiometer	0	◎

Selecting MS speed command stage 0 command source, can be set by function code P11.00, also by analog preset to realize flexible adjusting. Refer to P11 MS speed parameter.

P00.14	Acceleration Time 0	0.0s~3600.0s	Model setting	○
P00.15	Deceleration Time 0	0.0s~3600.0s	Model setting	○

Acceleration/deceleration time means time needed if the inverter Acceleration from 0.00Hz to the reference frequency (P00.16). It is used to set frequency changing slope.

P00.16	Acceleration/Deceleration Time Reference Frequency	0: Max output frequency 1: Set frequency	0	○

Via selecting acceleration/deceleration time unit to change the setting max range of Acceleration/down time to meet different requirement.

Acceleration/deceleration time means the time needed if the inverter acceleration/deceleration to reference frequency, via changing P00.16 to change frequency acceleration/deceleration slope ratio. When P00.16=1, the time needed from zero frequency acceleration/ deceleration to setting frequency is the setting acceleration/ deceleration time.

P00.17	Rotation Direction	0: Same Direction 1: Reverse Direction	0	○
P00.18	Reverse Control	0: Allow reverse 1: Forbid reverse	0	○

P00.17 is used to regulate the forward rotation of motor, the same purpose as change any phase of output U, V, W sequence.

P00.18 can set if motor reverse rotating is enabled, to avoid motor reverse rotating causing equipment damage in some application.

WARNING

● When motor run is reverse with actual required, then can randomly change two lines sequence among U, V, W to change motor run direction. Disabled to use software to setup the motor run direction.

P00.19	Carrier Frequency Setting	1.0kHz~16.0kHz	Model setting	○

Carrier frequency has important effect to inverter and motor, when carrier frequency rising, the power loss, temperature rising, noise of motor will decrease; when carrier frequency decreasing, inverter temperature will decrease. The leakage current of motor and radiation interference will decrease.

P00.21	Parameter Lock Selection	0: Lock disabled 1: Lock enabled, not enabled to change other parameters except the current one 2: Not enabled operating parameter initializing function code	0	○

When set this parameter as 1 (lock all parameter), except this function code, any function code is not Enabled to be changed, preventing user wrong operation. Set the parameter as 2, only locking parameter not been initialized, as P29.01 cannot be set as 1, preventing user from initializing parameter. If the parameter set as 0, user can randomly change function code.

P00.22	Inverter G/P Type	0: G type 1: P type	0	◎

If user set as P type, inverter is amplified one class. But after amplified overload capacity get weaker, can only be used as light load application, at present inverter will be effected overload protection according to the light load. If set as G type, inverter must match with motor, inverter will effected overload protection according to heavy load. Please refer to model list.

P00.23	Motor Parameter Self-learning	0: No operation 1: Dynamic self-learning 2: Static self-learning	0	◎

If select SVC operation, must get motor parameter dynamic self-learning. If carry out motor parameter dynamic self-learning, motor must get off with load or light load, if not, will increase error so cannot acquiring more precision motor parameter.

P00.24	AVR Function Selection	0: Disabled 1: Enabled	1	○

Inverter output voltage will automatically adjust function, to eliminate the effect of bus voltage fluctuation to inverter output voltage.

P00.25	Over modulation Selection	0x00~0x11 Unit's digit of LED: 0: Over modulation disabled 1: Over modulation enabled Ten's digit of LED: 0: Mild over modulation 1: Depth over modulation	0x01	◎

The function is used as boost inverter output voltage properly, in general condition user has no need to adjust the parameter.

P00.26	Motor 1 and Motor 2 Selection Channel	0: Function code P00.27 1: Terminal 2: Communication	0	◎
P00.27	Motor Selection By Keypad Setting	0: Motor 1 1: Motor 2	0	◎

VD300 support 2motors switchover, can keep independent 2motors parameter, including corresponding control parameter can be set separately, random switchover. Motor can be selected by terminal, communication selection, or P00.27.

P00.28	Load Type Selection(Only Enabled For V/F)	Unit's digit of LED: motor 1 load type selection 0: Non-inertia load 1: Inertia load Ten's digit of LED: motor 2 load type selection 0: Non-inertia load 1: Inertia load	0x00	◎

This function is used when inverter running in V/F mode and selecting load motor load type.

P00.29	K1 Coefficient	0.000~20.000	1.000	◎
P00.30	K2 Coefficient	0.000~20.000	1.000	◎

This function is used P00.04 frequency source superposition.

6.2 P01 Stop Control Parameter Group

P01.00	Start Running Mode	0: Direct start 1: DC braking restart 2: Rotation speed tracking restart	0	◎

Set motor start mode:

Start with starting frequency:

Firstly operating a period with setup start frequency and start frequency keep time, then acceleration/deceleration operate according to acceleration/deceleration time setup slope. Refer to P01.01 Firstly DC braking first then start:

According to current value and retention time, keep DC current for a while, then start 0 mode.

Speed tracking start:

Inverter checked the motor RPM firstly, then start according to detect motor RPM.

P01.01	Direct Starting Frequency	0.00Hz~10.00Hz	0.00Hz	◎
P01.02	Startup Frequency Holding Time	0.00s~60.00s	0.0s	◎

Start frequency is the initial frequency when inverter starting, as below diagram showed, start frequency retention time is the run time under start frequency. Start frequency generally set 1Hz~2Hz.

In low power application, by setting start frequency can quickly build slip, which is helpful in quickly start motor. For big power or heavy load application, properly extend start frequency retention time, can pre-excitation motor and reduce start current and boost start torque. If motor is rotating when start, can make motor speed getting low then Acceleration later.

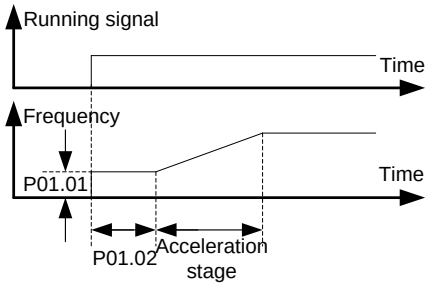

Fig 6.2-1 Schematic diagram for startup frequency

P01.03	Braking Current before Starting	0.0%~100.0% (inverter rate current)	0.0%	◎
P01.04	Braking Time before Starting	0.0s~60.0s	0.00s	◎

The DC braking before starting is the DC current before motor rotating output for in a period, P01.03 set input DC current value, 100.0% is relative to inverter rate current. P01.04 set the time of DC input. By injecting DC current to realize the effect of electromagnetic brake on motor and pre-excitation. For big power and heavy load application, via pre-excitation, start torque get bigger, impact current get smaller.

DC braking before start process as below diagram:

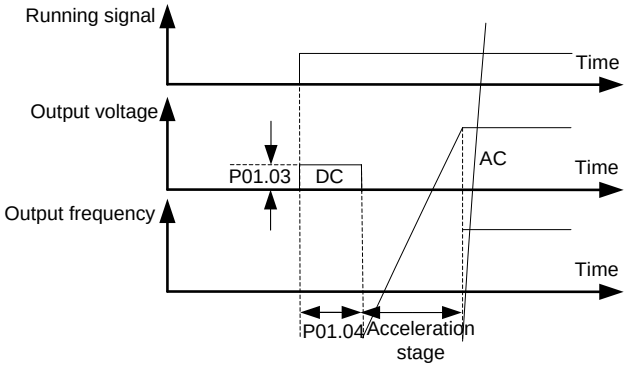

Fig 6.2-2 Schematic diagram for the braking current before starting

P01.05	Stop Mode Selection	0: Decelerate to stop 1: Coast to stop	0	○

Deceleration to stop: Deceleration to stop is motor relying on inverter braking, under set Deceleration time reducing to zero. Different application can adopt different stop mode.

Coast to stop: Coast to stop is inverter cut off motor current after receiving stop command, motor relying its inertia reduce speed to zero.

⚠ **DANGER**
After coast to stop, the motor is still in the high speed rotation, to prevent equipment damage or personal injury caused by!

P01.06	Initial Frequency of Stop DC Braking	0.00Hz~P00.07 (max output frequency)	0.00Hz	○
P01.07	Waiting Time of Stop DC Braking	0.000s: Auto delay 0.001s~60.000s	0.00s	○
P01.08	Stop DC Braking Current	0.0%~100.0%	0.0%	○
P01.09	Stop DC Braking Time	0.00s~60.00s	0.00s	○

During deceleration process, if frequency reducing to P01.06, waiting P01.07 setup time, starting input DC current to motor, acceleration braking. The input current value is set by P01.08, 100.0% is equal to rate inverter current, input DC current time is set by P01.09, if braking time is 0, then no need this process. Such as below diagram:

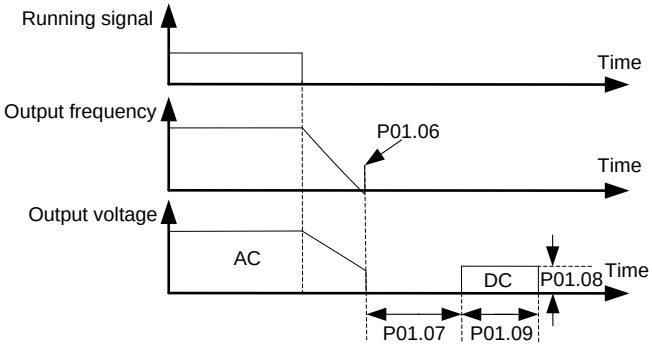

Fig6.2-3 Schematic diagram for DC braking time at stop

DC braking stage, motor rotator maintains certain holding power, preventing rotator no steady or wriggle after stop.

P01.10	Excitation Braking Coefficient	0: Disabled 100~150: The greater the coefficient, the greater the braking intensity	0	O

Inverter can make motor quickly reducing speed by increase motor magnetic flux. By increasing motor magnetic flux, motor generated energy in braking can be transformed to heat.

Magnetic flux can be used in motor stop, can also be used in changing motor speed. Its feature: braking once stopped, no need to wait magnetic flux weak then braking; furthermore, motor cooling effect is better, during excitation braking period, motor stator current increase, rotator current not increase, and stator cooling is faster than rotator.

P01.11	Short-circuit Braking Current	0.0%~150% (100% relate to inverter rate current)	0.0%	O
P01.12	Startup Short-circuit Braking Holding Time	0.00s~60.00s	0.00s	O
P01.13	Stop Short-circuit Braking Holding Time	0.00s~60.00s	0.00s	O

When the parameter value is set to a non 0, inverter output in start and stop is equivalent to get short circuit of U, V, W motor output.

P01.12 and P01.13 separately used to set start or stop short circuit braking retention time.

P01.14	Switchover Mode between FWD/REV Rotation	0: Switchover with zero frequency 1: Switchover with over starting frequency 2: Switchover at stop speed reach and delay	0	◎
P01.15	FWD/REV Rotation Dead-zone Time	0.0s~3600.0s	0.0s	O

When motor is switchover to reverse direction, can select direct over-zero frequency switchover, can also select start frequency switchover, or after motor reduce to 0 speed then switchover through forward/reverse dead zone time. As below diagram showed:

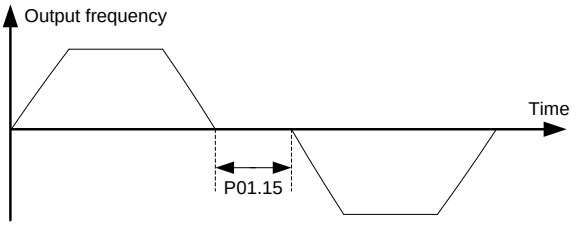

Fig 6.2-4 Schematic diagram for Dead time of FWD/REV rotation

P01.16	Stop Speed	0.00Hz~100.00Hz	0.50Hz	◎
P01.17	Detection Mode of Stop Speed	0: Detect according to speed set value(no stop delay) 1: Detect according to speed feedback(only enabled for vector control）	0	◎
P01.18	Detection Time of Feedback Speed	0.0s~100.0s（P01.17=1 enabled）	0.50s	◎
P01.19	Delay Time of Delay Time	0.0s~100.0s	0.0s	○

When the inverter output frequency to slow down to stop the speed and frequency inverter downtime (blockade output), motor inertia parking.

When the motor run mode set to vector control, and P01.17 is set to 1, less than P01.16 actual output frequency of frequency converter, and P01.18 set time detection, frequency converter downtime; Otherwise, keep the inverter stop speed and delay P01.19 set by time after downtime.

P01.20	Running Frequency Lower than Frequency Lower Limit Action	0: Running with frequency lower limit 1: Stop 2: Dormant standby	0	◎
P01.21	Dormant Recover Delay Time	0.0s~3600.0s(relative to P01.20=2)	0.0s	O

When the frequency lower limit of frequency inverter set greater than zero, P01.20 is used to set the frequency inverter run state when inverter real output frequency is lower than the in frequency lower limit.

When set to 2, P01.20 P01.21 set dormancy recovery delay effectively. If you need to restart the output, you must meet the output frequency is greater than the lower limit of frequency, and greater than the lower frequency of accumulative length more than hibernation recovery delay time.

P01.22	Power-on Terminal Running Protection Selection	0: Terminal operation command is disabled when power on 1: Terminal operation command is enabled when power on	0	O

The terminal run command is disabled:

when the inverter is power on, if the terminal has been effective, after power on, the inverter will not response terminals run commands, run to terminal is Disabled after a period of time, frequency converter to run normal response to a terminal. In addition, when the inverter after failure occurs, terminal operation command must be disabled for a period of time, otherwise the frequency converter does not respond to run terminal

The terminal run command is enabled:

When the inverter is power on or failure, terminals have been effectively run the command, the inverter will run according to the terminal, start the motor run directly. This situation may lead to the non expected results or dangerous.

P01.23	Restart Selection Upon Power Failure	0: Disabled restart 1: Allow restart	0	○
P01.24	Waiting Time of Restart Upon Power Failure	0.0s~3600.0s (correspond P01.23=1 effective)	1.0s	○
P01.25	Start Delay Time	0.0s~60.0s	0.0s	◎

When the inverter power failure, after power on
again, whether the inverter automatically start running.
If we need inverter's automatic running function after power failure, it must satisfy the restart waiting time
set by the P01.24 plus the start delay time set by P01.25, then the inverter can be start and running.

P01.26	Acceleration/Deceleration Mode Selection	0: Straight-line type 1: S curve (reserved)	0	○
P01.27	Ratio of S Curve Start Segment	0.0%~（100.0%-P01.28） (relate to acceleration/deceleration time)	30.0%	●
P01.28	Ratio of The S Curve End Segment	0.0%~（100.0%-P01.27） (relate to acceleration/deceleration time)	30.0%	●

Acceleration/deceleration curve: select inverter frequency change way in the process of frequency change in the acceleration/deceleration frequency and so on. If choose linear acceleration/deceleration, frequency variation of the slope is fixed, change slope is determined by the deceleration time. If choose the S curve, frequency changes, the slope is always starting from 0 change, when acceleration/deceleration is completed, the slope is ended with gradually to 0. Due to the continuous changes in the slope, the motor output is the smallest impact on load device, and is suitable for the shock, comfort has certain requirements, such as elevator, belt conveyor, etc.

P01.29	Rotation Speed Tracking Mode Selection	Unit's digit of LED : tracking direction selection 0: According to the actual detection direction 1: According to the run direction before stop Ten's digit of LED: zero speed exciting selection 0: No exciting 1: Exciting	0x10	○

When the running frequency of the motor is low, the hardware detected counter electromotive force is very weak, the accuracy of identification of the motor speed is decreased. But through the exciting, we can get more accurate the actual speed of the motor.

P01.30	Delay Time of Rotation Speed Tracking	0~2000ms	500	○

Under the speed tracking boot mode, the inverter receives the starting signal, and it will track the speed after delaying the reaction time.

P01.31	Voltage Rise Rate of Rotation Speed Tracking	0~1000	100	○

The larger the value is, the faster tracked the rotational speed is, and the fault is prone to overvoltage when the speed is over. The smaller the value is, the longer time of the whole tracked the rotational speed is.

P01.32	Jog Speed Tracking Effective Selection	0: Disabled 1: Enabled	1	○

When select 1, the jog state also with speed tracking.

6.3 P02 Motor 1 Parameters

P02.00	Motor 1 Type	0: Asynchronous motor	0	●
P02.01	Rated Motor 1 Power	0.4kW~1000.0kW	Model dependent	◎
P02.02	Rated Motor 1 Voltage	0V~1500V	Model dependent	◎
P02.03	Rated Motor 1 Current	0.0A~2000.0A	Model dependent	◎
P02.04	Rated Motor 1 Frequency	0.00Hz~P00.07	Model dependent	◎
P02.05	Rated Motor 1 Rotation Speed	0RPM~65535RPM	Model dependent	◎

Caution: above parameter is setting motor 1 General asynchronous machine, user input motor nameplate parameter in inverter.

Note: The power of asynchronous motor should match with the inverter power class. Generally the operating motor power is higher one class than inverter power, or motor power is smaller two standard class than inverter power. Otherwise the control performance will be decreased.

P02.06	Motor 1 Stator Resistance	0.000Ω~65.535Ω	Model dependent	○
P02.07	Motor 1 Rotor Resistance	0.000Ω~65.535Ω	Model dependent	○
P02.08	Motor 1 Rotor and Stator Leakage Inductive Reactance	0.0mH~6553.5mH	Model dependent	○
P02.09	Motor 1 Rotor and Stator Mutual Inductive Reactance	0.0mH~6553.5mH	Model dependent	○
P02.10	Motor 1 No-load Current	0.0A~P02.03(rated motor 1 current)	Model dependent	○

Above parameter is the motor 1 mathematics mode detail parameter, don’t need user manual set. When users change motor nameplate parameter or doing identification, above parameter will update automatically. If user have knew motor model parameter, then no need doing parameter identification, can be manual input. The mathematical model of single phase motor as below diagram showed:

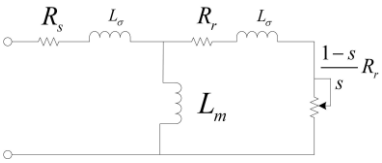

Fig 6.3-1Schematic Diagram for mathematical model of single phase motor

6.4 P03 Motor 1 Vector Control Parameters Group

P03.00	Speed and Torque Control Selection	0: Speed control 1: Torque control	0	◎
P03.01	Speed Loop Proportional Gain 1	0~200.0	Vector 0: 20.0 Vector 1: 10.0	○
P03.02	Speed Loop Integral Time 1	0.000: Integral disabled 0.000s~10.000s	0.200s	○
P03.03	Speed Loop Parameter Switchover Frequency Point 1	0.00Hz~P03.06	5.00Hz	○
P03.04	Speed Loop Proportional Gain 2	0~200.0	Vector 0: 20.0 Vector 1: 10.0	○
P03.05	Speed Loop Integral Time 2	0.000: Integral disabled 0.000s~10.000s	0.200s	○
P03.06	Speed Loop Parameter Switchover Frequency Point 2	P03.03~P00.07(max output frequency)	10.00Hz	○

Above parameter setup vector control speed loop PI parameter, can set two groups of parameter and separately used low frequency and high frequency operation. The two groups of parameters can be smoothly switchover according to switchover frequency 1 and switchover frequency 2, as below diagram showed.

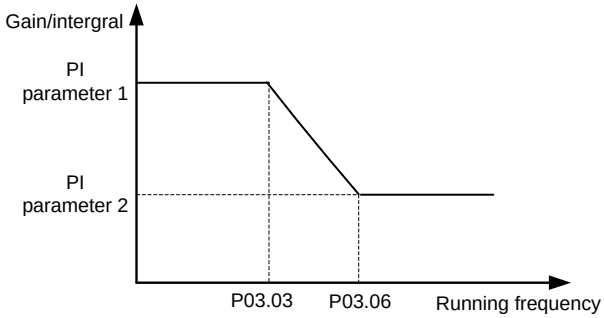

Fig 6.4-1Schematic Diagram for speed loop parameter switchover

Speed loop proportion gain (P03.01、P03.04):

Please according to load inertia of motor to adjust the parameters, for larger inertia load, please increase the proportional gain. For small inertia load, reduced the proportional gain. When the rate of speed loop gain slants big, although the response speed is faster, but may occur motor speed oscillation and overshoot. On the contrary, if the proportional gain ratio is too small, the control response becomes slow, so speed adjusting to the stable value is too long. As shown in figure 6 -11.

Speed loop integral time （P03.02、P03.05）:

Same as the proportional gain, the speed loop integral time is short, fast control response, but if it is too small may lead to oscillation and instability. When the integration time is large, the control response is slow, speed deviation elimination is getting longer. So all requirements will be

appropriately adjusted based on actual situation. As shown in the figure below:

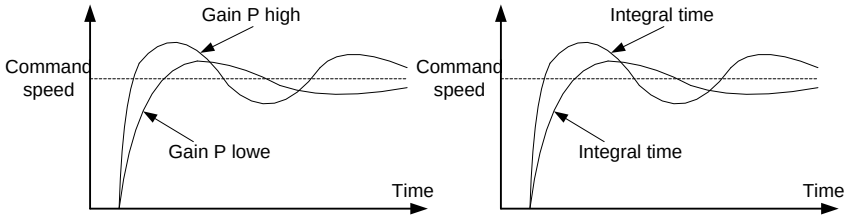

Fig 6.4-2 Schematic Diagram for speed loop PI parameter

P03.07	Speed Loop Output Filter	0~8 (corresponding 0~2^8/10ms)	0	○

Speed loop output filter: speed loop output via first-order filter was sent to current controller, by increasing this filter to decrease the output current ripple, but dynamic response will be slow down.

P03.08	Vector Control Slip Compensation Coefficient (Motoring Condition)	50.0%~200.0%	100.0%	○
P03.09	Vector Control Slip Compensation Coefficient (Generating Condition)	50.0%~200.0%	100.0%	○

Slip compensation factor is used in adjusting vector control slip frequency, to improve system speed control precision, properly adjust the parameter, can effectively suppress speed offset.

P03.10	Current Loop Proportion Coefficient P	0~60000	1000	○
P03.11	Current Loop Integral Coefficient I	0~60000	1000	○

Above current loop PI adjusting parameter is only applied for vector control mode 1.

WARNING

The two parameters in PI adjustments of the current loop, it directly affect the system's dynamic response speed and control precision, in general case, the user does not need to adjust.

P03.12	Torque Setting Mode Selection	0: Function code P03.13 1: AI1 2: AI2 3: AI3(extension card) 4: High speed Pulse input 5: Communication setting Notes: 100% of 1~4 corresponding P03.13	0	○

Vector torque control, torque command can be set by function code P03.13, can also be set by analog, HS pulse input, communication given. 100% of 1~4 full scale corresponding P03.13.

P03.13	Keypad Setting Torque	-300.0%~300.0%（rated motor current）	100.0%	○
P03.14	Torque Setting Filter Time	0.000s~10.000s	0.100s	○

Keypad set torque: inverter output torque is directly set by keypad input. 100% relative to motor torque of its rate current.

Torque set the filter time: used to set torque setting changing rate, the bigger the more slower, better for torque stability, but the motor response speed can be slow down.

P03.15	Source Setting of Frequency Upper Limit of Forward in Torque Control	0: Function P03.17 1: AI1 2: AI2 3: AI3(extension card) 4: High speed Pulse input 5: Communication setting Notes: 100% of 1~4 relative to the maximum output frequency	0	○
P03.16	Source Setting of Frequency Upper Limit of Reverse in Torque Control	0: Function code P03.18 1: AI1 2: AI2 3: AI3(extension card) 4: High speed Pulse input 5: Communication setting Notes: 100% of 1~4 relative to the maximum output frequency	0	○

Used to select torque control mode forward, reverse frequency upper limit setting source.

P03.17	Frequency Upper Limit Keypad Setting of Forward in Torque Control	0.00Hz~P00.07（Max output frequency）	50.00Hz	○
P03.18	Frequency Upper Limit Keypad setting of Reverse in Torque Control	0.00Hz~P00.07（Max output frequency）	50.00Hz	○

When under torque control mode, forward/reverse upper limit frequency is set by keypad, the above two function code separately relative to forward, reverse upper limit frequency set value.

P03.19	Electric Torque Upper Limit Source Setting	0: Function code P03.21 1: AI1 2: AI2 3: AI3 (extension card) 4: HS pulse input 5: Communication setting Note: Setting mode 100% of 1-4 corresponds to three times of the motor current	0	○

P03.20	Braking Torque Upper Limit Source Setting	0: Function code: P03.22 1: AI1 2: AI2 3: AI3 (extension card) 4: HS pulse input 5: Communication setting Note: Setting mode 100% of 1-4 corresponds to three times of the motor current	0	○

Used to select motor, braking torque upper limit setting source.

P03.21	Electric Torque Upper Limit Keypad Setting	0.0%~300.0%（rated motor current ）	180.0%	○
P03.22	Braking Torque Upper Limit Keypad Setting	0.0%~300.0%（rated motor current）	180.0%	○

When motor/braking torque upper limit is set by keypad, the two function code is separately relative to motor/braking torque set upper limit.

P03.23	Max Voltage Limit	0.0%~120.0%	100.0%	◎

Used to set inverter max output voltage.

P03.24	Pre-excitation Time	0.000s~10.000s	0.300s	○

Pre-excitation time: magnetic flux is build up before motor started, in order to make motor start quick response. If there is run command, the function code will enter to pre-excitation state according to set time, once magnetic flux has built up, then enter to normal Acceleration run.

P03.25	Weak Magnetic Coefficient in Constant Work Area	0.1~2.0	0.3	○
P03.26	Min. Weak Magnetic Point in Constant Work Area	10%~100%	20%	○

In vector control mode, when motor run speed is higher than rate RPM, motor enter to weak flux run stator. Via setting weak flux factor can change weak flux curve, the value is bigger the flux curve is more steep, vice versa, the flux curve getting more flat. As below diagram:

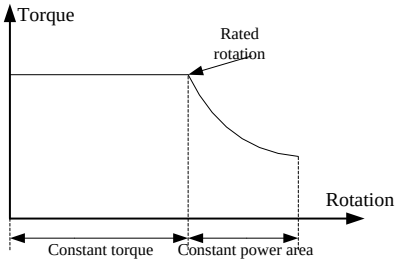

Fig 6.4-3 Weak magnetic function diagram

P03.27	Vector Control Weak Magnetic Proportion Gain	0~4000	1200	○

In vector control mode, when motor RPM is higher than rate RPM, this parameter is used to adjust current response speed.

P03.28	Low Frequency Torque Compensation Coefficient	0.0%~50.0%	0.0%	○
P03.29	High Frequency Torque Compensation Coefficient	0.0%~50.0%	0.0%	○
P03.30	Low Frequency Torque Compensation Cutoff Frequency	0.00Hz~50.00Hz	5.00Hz	○
P03.31	High Frequency Torque Compensation Cutoff Frequency	0.00Hz~100.00Hz	50.00Hz	○

Above 4 parameter are under torque control mode, separately used to set low frequency compensation factor and low frequency compensation cutoff frequency, high frequency compensation factor and high frequency compensation cutoff frequency. When inverter output frequency lower than P03.30, torque compensation is P03.28 setting coefficient; when inverter output frequency is higher than P03.31, torque compensation is P03.29 setting coefficient; when inverter output frequency is between P0.30~P03.31, torque compensation is P03.28 and P03.29 linear interpolation coefficient.

P03.32	Acceleration/Deceleratio n Torque Compensation Coefficient	0.000~10.000	0.000	○
P03.33	Acceleration/Deceleratio n Torque Compensation Upper Limit	0.0%~50.0%	5.0%	○
P03.34	Acceleration/Deceleratio n Torque Compensation Frequency Lower Limit	0.00Hz~50.00Hz	10.00Hz	○

Above 3 parameters are under vector control mode, when motor is under Acceleration/down status, its torque compensation coefficient, compensation upper limit and compensation lower limit frequency. So properly set the group parameter is helpful for stop/start or Acceleration/down invariable tension.

P03.35	Torque Control Stator Resistance Compensation Selection	0: Disabled 1: Enabled	0	○

By compensating the stator resistance, the low frequency torque is more stable.

6.5 P04 motor 1 V/F Control Parameters Group

P04.00	Motor 1V/F Curve Setting	0: Straight line V/F curve 1: Multi-stage V/F curve 2: 1.3#power low torque V/F curve 3: 1.7#power low torque V/F curve 4: 2.0#power low torque V/F curve 5: V/F complete separation 6: V/F half separation	0	◎

If P00.00 set as 0(V/F control mode), then V/F type is set by P04.00. User can select appropriate V/F curve type according to loading type. If loading is wind pump water pump etc., generally select square V/F curve, 2.0 # power. As below diagram:

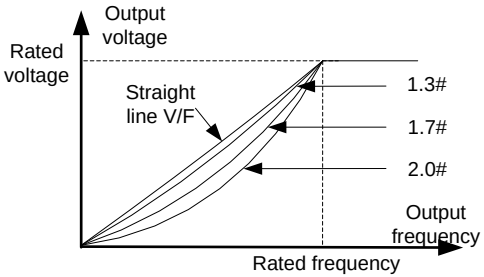

Fig 6.5-1 Schematic Diagram for Parabolic type

P04.02	Multi-Stage V/F Frequency Point 1	0.00Hz~P04.04	0.00Hz	○
P04.03	MS V/F Voltage Point 1	0.0%~110.0%（rated motor 1 voltage）	0.0%	○
P04.04	MS V/F Frequency Point 2	P04.02~P04.06	0.00Hz	○
P04.05	MS V/F Voltage Point 2	0.0%~110.0%（rated motor 1 voltage）	0.0%	○
P04.06	MS V/F Frequency Point 3	P04.04~P00.07(max output frequency)	0.00Hz	○
P04.07	MS V/F Voltage Point 3	0.0%~110.0%（rated motor 1 voltage）	0.0%	○

When P04.00 set as 1(MS V/F), each stage frequency and voltage can be set by above function code, details as below diagram. The 1st point is 0.00Hz, output voltage is manual torque boost (P04.09) corresponding voltage. The 5th point is rate frequency, output voltage is rate voltage. Other voltage is formed by 5points linear interpolation. MS V/F is used in special application which users has output voltage requirement, or be used in solving some frequency point with resonance phenomena.

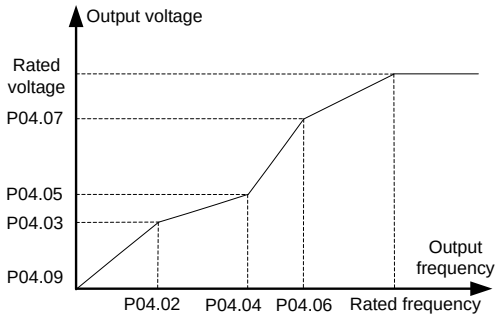

Fig 6.5-2 Schematic Diagram for MS V/F Curve

P04.08	V/F Slip Compensation Gain of Motor 1	0.0%~200.0%	0.0%	○

Slip compensation gain: used in V/F control mode compensation when loading changes caused motor RPM changes, to improve motor mechanic feature hardness.

The parameter is used in calculating slip frequency, set value 100% stand for rate torque current corresponding with rate slip frequency, so reasonable slip compensation gain system can precisely adjust speed control offset. The parameter set principle: when motor with heavy loading and speed getting lower, it needs to increase the coefficient, otherwise to reduce the factor.

P04.09	V/F Torque Boost	0.0%: Fixed torque boost 0.1%~10.0%	0.0%	○
P04.10	Cutoff Frequency of Torque Boost	0.0%~50.0%（relative to rated motor 1 frequency）	20.0%	◎

When motor is run under V/F control mode, in order to make up motor stator resistance voltage loss, it needs to compensate certain voltage value, can be set by P04.09, referring to below diagram. Compensation 100.0% is equal to motor rate voltage, generally could not exceeding 10.0%.

The heavy the load, the bigger the boosting, but if the set value is too big can result in burning the motor.

Manual torque boost parameter is effective with linear V/F, parabola V/F, MS V/F.

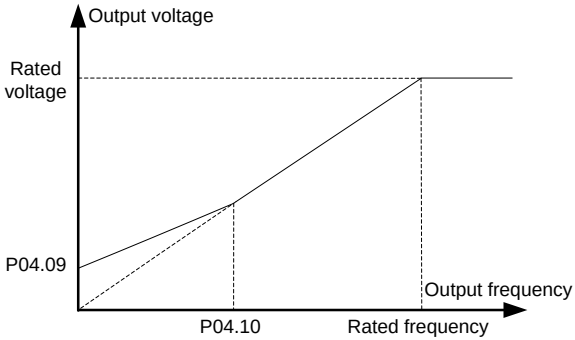

Fig 6.5-3 Schematic Diagram for torque boost

P04.11	Low Frequency Suppression Oscillation Factor of Motor 1	0~100	10	○
P04.12	High Frequency Suppression Oscillation Factor of Motor 1	0~100	10	○
P04.13	Suppression Oscillation Cut-off Point of Motor 1	0.00Hz~P00.07（maximum output frequency）	30.00Hz	○

When motor is under V/F control mode, especially loading motor is big power motor, it can easily cause current oscillation, lightly that motor cannot run steadily, severely that motor can result inverter overcurrent error. At the moment it can properly set this group parameter to eliminate such problem.

P04.14	Motor 1 Voltage Setting Channel Selection	0: Function code P04.15 1: AI1 2: AI2 3: AI3 (extension card) 4: HS pulse input 5: PID control 6: Communication setting	0	◎

When selecting inverter load as V/F separation control (P04.00=5), select output voltage set channel.

P04.15	Motor 1 Keypad Setting Voltage Value	0.0%~100.0%	100.0%	○

This parameter is used to set the V/F separation control the output voltage of the keyboard settings.

P04.16	Motor 1 Voltage Increasing Time	0.0s~3600.0s	5.0s	○
P04.17	Motor 1voltage Decreasing Time	0.0s~3600.0s	5.0s	○
P04.18	Motor 1 Maximum Output Voltage	P04.19~100.0%（rated motor 1 voltage）	100.0%	◎
P04.19	Motor 1 Minimum Output Voltage	0.0%~ P04.18（the rated voltage of the motor）	0.0%	○

Used to set the output voltage upper / lower limit in V/F separation control, and the time needed for output voltage increase from 0 to the upper limit or from upper limit decreasing to 0.

P04.20	Motor 1 V/F Control Weak Magnetic Coefficient	1.00~1.30	1.00	○

In V/F control mode, when motor RPM is higher than rate RPM, motor enter into weak flux run status. Via setting weak flux factor to change its curve, the bigger value it is , the more steeper the curve is, and vice versa, the flux curve getting more flat. Refer to reference function code P03.27

P04.21	Energy Saving Running Selection of Motor 1	0: Disabled 1: Enabled	0	◎

This function is used to set the light load motor state, if open the energy saving operation. If open, when the motor in light load condition, the inverter will automatically adjust the output voltage, in order to achieve the goal of energy saving.

6.6 P05 Input Terminals Function Parameter Group

P05.00	Terminal Control Running Mode	0: Two-line mode 1 1: Two-line mode 2 2: Three-line mode 1 3: Three-line mode 2 4: Alternate control	0	◎

This parameter defines five different modes of controlling the operation of the inverter via the external terminals

1: Two-line mode 1: This mode is the most commonly used two-line mode. The forward / reverse rotation of the motor is decided by the commands of Dix, DIy terminals; when Dix and DIy are effective, the inverter to keep the first effective terminal determined direction. The terminal function set as below:

Terminal	Set Value	Description
Dix	1	Forward run
DIy	2	Reverse run

DIx、DIy is DI1~DI5、HDI1 Multi-function digital input terminals, electric level Enabled.

K1	K2	Command
0	0	Stop
1	0	FWD
0	1	REV
1	1	Keep

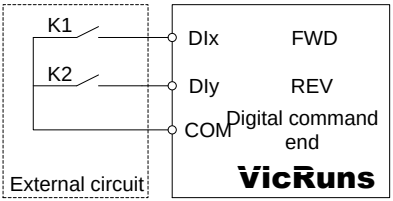

Fig 6.6-1 Schematic diagram of two line mode 1

Two-line run mode 2: When this mode is adopted, DIx is enabled terminal. The direction is determined by the status of DIy. Terminal function set as below.

Terminal	Set Value	Description
DIx	1	Running
DIy	2	(FWD/REV)

DIx、DIy is DI1~DI5、HDI1 Multi-function digital input terminals, electric level Enabled.

K1	K2	Command
0	0	Stop
1	0	FWD
0	1	Keep
1	1	REV

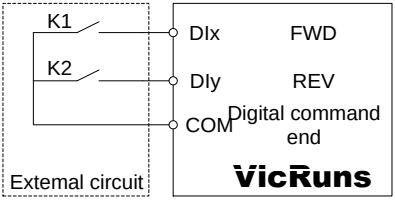

Fig 6.6-2 Schematic diagram of two line mode 2

Three-line control mode 1: In this mode, DIn is enabled terminal, and the direction is controlled by DIx、DIy respectively.

Terminal function set as below.

Terminal	Set Value	Description
DIx	1	Running
DIy	2	(FWD/REV)
DIn	3	Three-line control mode 1

(1) When need to run, must be closed DIn terminals first, implemented by DIx or DIy pulse rising to realize the motor forward or reverse control;

(2) When need to stop, it should be done by disconnect DIn terminal signal;

(3) The DIx, DIy, DIn is DI1 ~ DI5, HDI1 multi-function digital quantity input terminals, DIx, DIy for pulse effectively, the DIn of level effectively;

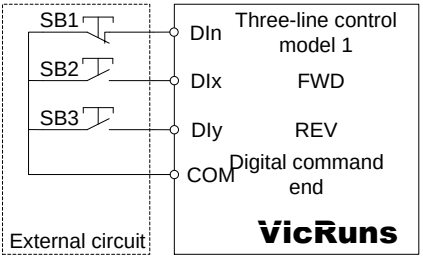

Fig 6.6-3 Three-line control mode 1

SB1: Stop button SB2: Forward rotation button SB3: Forward rotation button

Three-line control mode 2: In this mode, DIn is enabled terminal, and the run command is given by DIx, while the direction is determined by the status of DIy. Terminal function as below:

Terminal	Set Value	Description
DIx	1	Running
DIy	2	(FWD/REV)
DIn	3	Three-line control mode 2

(1) When need to run, must be closed DIn terminals first, produced by DIx pulse rising along the motor run signals, DIy status produce motor rotating direction signals.

(2) When need to stop, it should be done by disconnect DIn terminal signal.

(3)The DIx, DIy, DIn is DI1 ~ DI5, HDI1 multi-function input terminals, DIx for pulse effectively, DIy, DIn for level effectively.

K	Command
0	FWD
1	REV

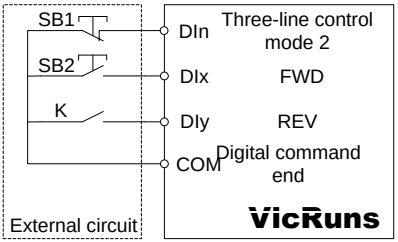

Fig 6.6-4 Three-line control mode 2

SB1: Stop button SB2: Run button K: forward/reverse switchover

Alternative control mode: this mode Din as enabled terminal, run and the rotating direction and stop are separately controlled by Din, DIy alternatively. Terminal function as below:

Terminal	Set Value	Description
Dix	1	Forward, stop
DIy	2	Reverse, stop
DIn	3	Alternative control mode

Din terminal must be closed before operating, the initial pulse rising by DI x DIy to control motor forward or reverse rotating. The second pulse rising to control stop, and such repeat operation to control inverter start/ stop. Note: DIx or DIy as start signal and meanwhile as direction signal, if as stop signal then the effect is the same. As for the first time after the electricity through DIx terminal to make it produce a pulse let inverter is run, the need to stop when the second pulse can be produced by DIx delay can also be produced by the DIy, the third pulse will delay let inverter is up and run, run direction by a third impulse signal is produced DIx or pulse produced by DIy.

At the same time, through disconnect DIn terminal signal can also achieve the downtime control frequency converter.

Among them, the DIx, DIy, DIn is DI1 ~ DI5, HDI1 multi-function digital quantity input terminals, DIx, DIy for pulse effectively, the DIn of level effectively.

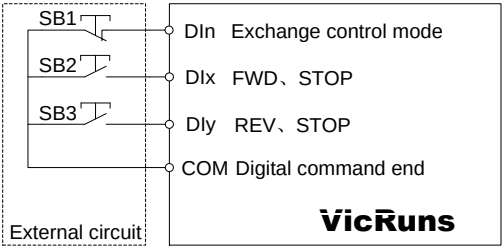

Fig 6.6-5 Alternate control mode

SB1: Stop button SB2: FWD、STOP button SB3: REV、Stop button

P05.01	DI1 Input Terminal Function Selection	0~63, see table blow	1	◎
P05.02	DI2 Input Terminal Function Selection		2	◎
P05.03	DI3 Input Terminal Function Selection		4	◎
P05.04	DI4 Input Terminal Function Selection		6	◎
P05.05	DI5 Input Terminal Function Selection		8	◎
P05.06	HDI1 Input Terminal Function Selection(Can Select HS Pulse Input)		0	◎
P05.07	DI7 Input Terminal Function Selection(Extension Card)		0	◎

P05.08	DI8 Input Terminal Function Selection(Extension Card)		0	◎
P05.09	DI9 Input Terminal Function Selection (Extension Card)		0	◎

This parameter is used to set the functions of the multifunctional digital input terminals.

Set Value	Function	Description
0	No function	The terminals not being used can be set “ no function”, to avoid wrong operation.
1	Forward running	Via external terminals to control inverter forward reverse run
2	Reverse running	
3	Three-line run control	Via this terminal to confirm the inverter run mode is 3line run or alternative control mode. Refer to function code P05.00 (“terminal control run mode”) description.
4	Forward Jog(FJOG)	FJOG is jog forward run, RJOG is jog reverse run. Jog run frequency, jog Acceleration/down time refer to function code P09.00, P09.01, P09.02 description.
5	Reverse Jog(RJOG）	In any control mode (panel control, terminal control, communication control), inverter block output, at present motor stop is not controlled by inverter. This method is the same as P01.05 described Coast to stop.
6	Coast to stop	Inverter Deceleration stop, all run parameter is in memory status; run is paused or stopped without receiving start signal, electric level effective.
7	Run pause	Inverter Deceleration stop, but all run parameter is in memory state, while run it doesn’t accept start/stop signal, electric level effective.
8	Fault reset (RESET)	Using terminal function to reset error, the same function as keypad RESET. This function can realize long distance error reset.
9	External fault input	When external error signal pulse sent to inverter, inverter alarm error Er017.
10	Frequency setting increase(UP)	By external terminal pre-set frequency to change frequency up/down command. Setting frequency can be goes up/down.
11	Frequency setting decrease(DOWN)	When frequency preset is digital preset or analog preset, the terminal jog can clear terminal UP/DOWN or keypad UP/DOWN to change frequency, to make frequency preset frequency recovering to initial value, pulse effective.
12	Frequency UP/DOWN setting clear	When frequency to a digital or analog given to the timing, the terminal point move can remove terminal keyboard UP/DOWN or UP/DOWN frequency values change by the Given frequency back to the initial value, pulse effectively.
13	Frequency UP/DOWN	When frequency to a digital or analog given to the timing, the

	setting clear temporary	terminal can remove temporarily closed terminal keyboard UP/DOWN or UP/DOWN frequency values change by the given frequency back to the initial value, terminal disconnect After return to terminal keyboard UP/DOWN or UP/DOWN frequency values change by level effectively.
14	Acceleration/decelerat ion time selection 1	It can select four types of Acceleration/Deceleration time through the combination of digital status of these two terminals. Refer to attached table 2 for detail.
15	Acceleration/decelerat ion time selection 1	
16	MS speed terminal 1	It can realize 16S speed through the combination of digital status of these four terminals. Refer attached table 1 for the 16 MS speed function and other 16 commands.
17	MS speed terminal 2	
18	MS speed terminal 3	
19	MS speed terminal 4	
20	MS speed pause	When the terminal is effective, MS speed function is Disabled temporarily and return to the original frequency temporarily; When the terminal failure, the inverter recover to MS speed run state.
21	Immediate DC braking	This terminal is enabled, and the inverter directly switchover to the DC braking status
22	Deceleration DC braking	The terminal is Enabled, slow down to stop inverter and DC braking starting frequency, and then switchover to DC braking state;
23	External stop	In any control mode, the terminal is used to make frequency converter and Deceleration and stop or Coast to stop, stop method by function code P01.05 setting determines;
24	Emergency stop function	The terminal is Enabled, inverter stop at the fastest speed
25	PID control pause	PID temporarily adjusting
26	Reverse PID action direction	The terminal is Enabled, PID action direction and the reverse direction set by P08.04 set
27	PID parameter switchover	To switchover PID parameter
28	Pre-excitation command	The terminal (level) is effective, the inverter excitation of effective is Enabled until the terminal is Disabled;
29	Torque control disabled	To Disabled the inverter from torque control, inverter enter into speed control method
30	Acceleration/decelerat ion disabled	Protect the inverter from affecting by the external signals (except emergency stop command), and maintain the current output frequency
31	Switchover between Set A and set B	When the command source is Enabled, the inverter frequency source can be switchover in various frequency source or frequency source combination.
32	Switchover between Combined set and set A	

33	Switchover between Combined set and set Br	
34	Simple PLC stop reset	In stop state, when the terminal (pulse) effectively, the inverter recover to initial status of PLC
35	Simple PLC pause	Inverter in the executive summary of PLC operation process, when the terminal effective (level), simple PLC to suspend operation, when the terminal failure, the inverter easy to recover from a pause state of PLC operation.
36	Counter trigger	The input terminal of counter
37	Counter reset	Clear up the counter status.
38	Length trigger (reserve)	Input terminal of length counter
39	Length reset (reserve)	Length counter clear up
40	Command switchover to keypad	When the terminal effective (level), switchover the inverter command source to the corresponding command source.
41	Command switchover to terminal	
42	Command switchover to communication	
43	Power consumption clear	Clear up the power consumption counter (pulse effective)
44	Power consumption holding	Keep the power consumption counter, but the inverter present run of power consumption is not accumulated (electric level effective)
45	Swing frequency pause(stop at present frequency)	The inverter keep present output frequency. Swing frequency function paused.
46	Swing frequency reset(back to center frequency)	Inverter keep the central frequency output, Swing frequency function Enabled
47	Motor switchover	If the function is set as Enabled, will switchover from motor 1 to motor 2, meanwhile motor parameter and corresponding control parameter will be switchover, level effective.
48	Clear the current running time	When this terminal effective, the inverter counting time of present run is cleared, the function and present run arrival time (P09.32) can be cooperatively used.
49	User-defined failure input 1	When user defined external error normally closed signal is sent to inverter, inverter alarm, error will be disposed according to alarm protection action mode.
50	User-defined failure input 2	When user defined external error normally closed signal is sent to inverter, inverter alarm, error will be disposed according to alarm protection action mode.
51	User-defined failure input 3	When user defined external error normally closed signal is sent to inverter, inverter alarm, error will be disposed according to alarm

		protection action mode.
52	User-defined failure input 4	When user defined external error normally closed signal is sent to inverter, inverter alarm, error will be disposed according to alarm protection action mode.

Attached Table 1 MS Speed Function Description

K4	K3	K2	K1	Direct setting	Corresponding Parameter
OFF	OFF	OFF	OFF	MS speed 0	P11.00
OFF	OFF	OFF	ON	MS speed 1	P11.01
OFF	OFF	ON	OFF	MS speed 2	P11.02
OFF	OFF	ON	ON	MS speed 3	P11.03
OFF	ON	OFF	OFF	MS speed 4	P11.04
OFF	ON	OFF	ON	MS speed 5	P11.05
OFF	ON	ON	OFF	MS speed 6	P11.06
OFF	ON	ON	ON	MS speed 7	P11.07
ON	OFF	OFF	OFF	MS speed 8	P11.08
ON	OFF	OFF	ON	MS speed 9	P11.09
ON	OFF	ON	OFF	MS speed 10	P11.01
ON	OFF	ON	ON	MS speed 11	P11.11
ON	ON	OFF	OFF	MS speed 12	P11.12
ON	ON	OFF	ON	MS speed 13	P11.13
ON	ON	ON	OFF	MS speed 14	P11.14
ON	ON	ON	ON	MS speed 15	P11.15

4 MS speed command terminals can be combined into 16 kinds of status, which corresponding to 16 command set value, as shown in table 1. Multistage speed instruction except as a multistage speed function, also can be a given source of PID, in order to meet the different demand of various setup value.

When frequency source is choosing as multi-stage speed, function code P11.00 ~ P11.15 100.0% corresponding with max output frequency P00.07.

When MS command source as PID given source, function code P11.00~P11.15 100.0% corresponding with PID feedback range 100%, the full range of feedback meter.

WARNING

● In all frequency command source, the MS speed command priority is highest , when multistage speed arbitrary terminals function is effective, multistage speed command is in priority.

Attached Table 2 acceleration/deceleration time selecting terminal function description

Terminals 1	Terminals 2	Acceleration/Deceleration time selection	Corresponding Parameter
OFF	OFF	Acceleration/deceleration 0	P00.14、P00.15

OFF	ON	Acceleration/deceleration 1	P09.03、P09.04
ON	OFF	Acceleration/deceleration 2	P09.05、P09.06
ON	ON	Acceleration/deceleration 3	P09.07、P09.08

P05.10	HDI1 Terminal Function Selection	0: HS pulse input 1: Switch signal input	0	◎

Set HDI1 terminal input property setup, default is HS pulse input function.

P05.11	Digit Input Polarity Selection	0x000~0x1FF: bit0~bit8 corresponding with DI1~DI5, DHI1, DI7~DI9 binary digit set value function: 0: Switch closed effective 1: Switch open effective	0x000	◎

Set DI digital input terminal effective state mode

0: When selecting switchover close effective, corresponding DI terminal connected with COM or OPEN is effective, open is invalid;

1: When selecting switchover open effective, corresponding DI terminal connected with COM or OPEN is invalid, open is effective;

P05.12	DI Filter Time	0.000s~1.000s	0.010s	○

It is used to set the software filter time of DI terminal status. If input terminal is easily interfered or resulting in wrong action in some application, in order to increase anti-interference capacity, the parameter can be increased. But the DI terminal response getting slow if filter time increased (HDI1 input function is disabled in HD pulse input)

P05.13	Low Limited of AI1 Voltage	-10.00V~P05.15	0.00V	○
P05.14	Corresponding Setting of AI1 Lower Limit	-100.0%~100.0%	0.0%	○
P05.15	Upper Limit of AI1 Voltage	P05.13~10.00V	10.00V	○
P05.16	Corresponding Setting of AI1 Upper Limit	-100.0%~100.0%	100.0%	○
P05.17	AI1 Input Filter Time	0.000s~10.000s	0.100s	○

Above function code is used to set the relation of analog AI1 input voltage and its standing setting value.

When analog input voltage is bigger or smaller than set upper limit(P05.15) or lower limit (P05.13), take the upper limit(P05.15) or lower limit (P05.13) to calculate.

AI1 input filter time, used to set AI1 software filter time, when the on-site analog is easily effected, then increase filter time to make detecting analog signal getting steady. But the filter time is bigger, the analog signal detecting response speed is lower. Please consider the actual situation to set.

In different application, analog set 100.0% is different from its corresponding nominal value, please refer to application description. Below diagram is two typical setting situation:

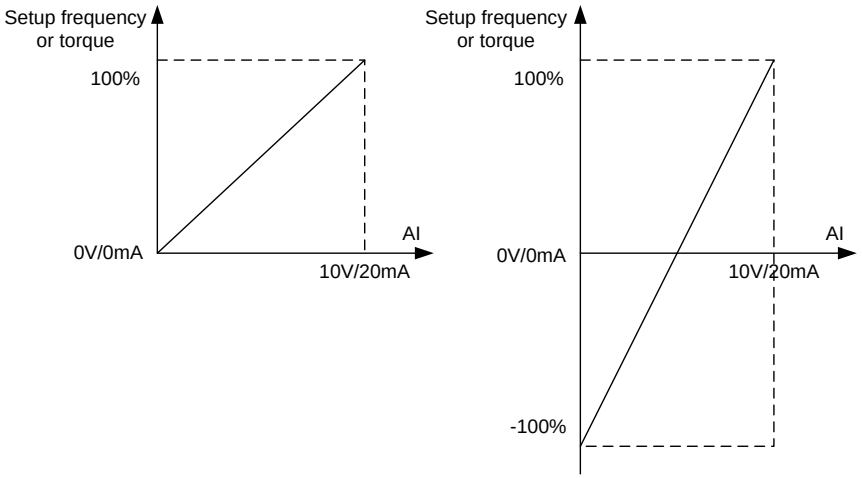

Fig.6.6-7 Corresponding Relationship between Analog Reference and Setting

P05.18	AI2 Input Type Selection	0: Voltage input 1: Current input	0	○
P05.19	Lower Limit of AI2 Voltage	-10.00V~P05.21	0.00V	○
P05.20	Corresponding Setting of AI2 Voltage Lower Limit	-100.0%~100.0%	0.0%	○
P05.21	Upper Limit of AI2 Voltage	P05.19~10.00V	10.00V	○
P05.22	Corresponding Setting of AI2 Voltage Upper Limit	-100.0%~100.0%	100.0%	○
P05.23	Lower Limit of AI2 Current	-20.00mA~P05.25	0.00mA	○
P05.24	Corresponding Setting of AI2 Current Lower Limit	-100.0%~100.0%	0.0%	○
P05.25	Upper Limit of AI2 Current	P05.23~20.00mA	20.00mA	○
P05.26	Corresponding Setting of AI2 Current Upper Limit	-100.0%~100.0%	100.0%	○
P05.27	AI2 Input Filter Time	0.000s~10.000s	0.100s	○

The method of setting AI2 function and usage, refer to AI1 description, when analog input is current input, 1mA current is equal to 0.5V voltage, corresponding 20mA current is equal to 10V, as diagram 6.6-6 showed linear relation.

P05.28	AI3 Input Type Selection	0: Voltage input 1: Current input	0	○

P05.29	Lower Limit of AI3 Voltage	-10.00V~P05.31	0.00V	○
P05.30	Corresponding Setting of AI3 Voltage Lower Limit	-100.0%~100.0%	0.0%	○
P05.31	Upper Limit of AI3 Voltage	P05.29~10.00V	10.00V	○
P05.32	Corresponding Setting of AI3 Voltage Upper Limit	-100.0%~100.0%	100.0%	○
P05.33	Lower Limit of AI3 Current	-20.00mA~P05.35	0.00mA	○
P05.34	Corresponding Setting of AI3 Current Lower Limit	-100.0%~100.0%	0.0%	○
P05.35	Upper Limit of AI3 Current	P05.33~20.00mA	20.00mA	○
P05.36	Corresponding Setting of AI3 Current Upper Limit	-100.0%~100.0%	100.0%	○
P05.37	AI3 Input Filter Time	0.000s~10.000s	0.100s	○

The method of setting AI3 function and usage, refer to AI1 description, when analog input is current input, 1mA current is equal to 0.5V voltage, corresponding 20mA current is equal to 10V, as diagram 6.6-6 showed linear relation.

P05.39	Minimum Frequency of High-Speed Pulse Input	0.00kHz~P05.41	0.00kHz	○
P05.40	Corresponding Setting of Minimum Frequency of High-Speed Pulse Input	-100.0%~100.0%	0.0%	○
P05.41	Maximum Frequency of High-Speed Pulse Input	P05.39~100.00kHz	50.00kHz	○
P05.42	Corresponding Setting of Maximum Frequency of High-Speed Pulse Input	-100.0%~100.0%	100.0%	○
P05.43	HS (Pulse) Input Filter Time	0.000s~10.000s	0.000s	○

The set of function is used to set the relation of HDI1 pulse frequency and corresponding setup. Pulse frequency only input by HDI1 channel to inverter. The set function is similar to AI1, refer to AI1 description.

P05.44	DI1 Terminals Close Delay Time	0.0s~6000.0s	0.0s	○
P05.45	DI1 Terminals Open Delay Time	0.0s~6000.0s	0.0s	○
P05.46	DI2 Terminals Close Delay Time	0.0s~6000.0s	0.0s	○
P05.47	DI2 Terminals Open Delay Time	0.0s~6000.0s	0.0s	○

P05.48	DI3 Terminals Close Delay Time	0.0s~6000.0s	0.0s	○
P05.49	DI3 Terminals Open Delay Time	0.0s~6000.0s	0.0s	○
P05.50	DI4 Terminals Close Delay Time	0.0s~6000.0s	0.0s	○
P05.51	DI4 Terminals Open Delay Time	0.0s~6000.0s	0.0s	○
P05.52	DI5 Terminals Close Delay Time	0.0s~6000.0s	0.0s	○
P05.53	DI5 Terminals Open Delay Time	0.0s~6000.0s	0.0s	○
P05.54	HDI1 Terminals Close Delay Time	0.0s~6000.0s	0.0s	○
P05.55	HDI1 Terminals Open Delay Time	0.0s~6000.0s	0.0s	○
P05.56	DI7 Terminals Close Delay Time	0.0s~6000.0s	0.0s	○
P05.57	DI7 Terminals Open Delay Time	0.0s~6000.0s	0.0s	○
P05.58	DI8 Terminals Close Delay Time	0.0s~6000.0s	0.0s	○
P05.59	DI8 Terminals Open Delay Time	0.0s~6000.0s	0.0s	○
P05.60	DI9 Terminals Close Delay Time	0.0s~6000.0s	0.0s	○
P05.61	DI9 Terminals Open Delay Time	0.0s~6000.0s	0.0s	○

The group function code is used to set the delay time of inverter disposing input signal when the input terminal connecting and disconnecting. HDI1 channel input function is Enabled only when switchover input function namely P05.10 = 1 delay effective. As following figure:

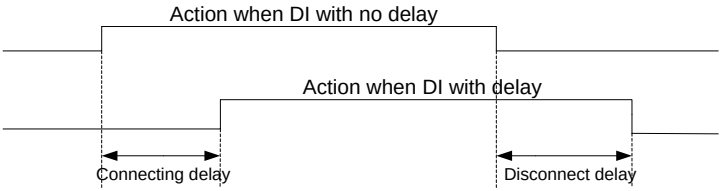

Fig.6.7-7 DI connection delay and disconnection delay diagram

P05.62	Virtual Input Terminal Setting Selection	0: Disabled 1: Communication setting	0	○

This function code is used to set the input terminals in the communication control, whether or not to use communication virtual terminal to control converter. Please refer to the communication protocol in detail. Note: when the input terminals use communication control, can only use all communication virtual terminal control mode.

P05.63	Travel Switch Lock Time	0.0s~60.0s	1.0s	○

For terminal control operation mode 5 (Round trip control), please refer to the detail specification of round trip control mode.

6.7 P06 Output Terminal Function Parameter Group

P06.00	HDO1 Terminals Output Mode Selection	0: HS Pulse output 1: Switch signal output	0	○

HDO1 terminal is programmable multiplexing terminal. It can be used as high-speed pulse output (HDO), It can also be used as collector open circuit output terminal (DO).

P06.02	Digital Output Effective Logical Selection	0x00~0x1F: bit0~bit3 correspond to DO1 HDO1 T1 T2 DO5, binary bit set value function 0: Switch closed 1: Switch open	0x00	○

Define output side digital output logic.

0: Switchover closed, digital output terminal and corresponding mutual terminal connected is Enabled status, disconnected is Disabled status.

1: Switchover opened, digital output terminal and corresponding mutual terminal connected is Disabled status, connected is Disabled status.

P06.03	DO1 Digit Output Function	0~33, see table blow	0	○
P06.04	HDO1 Digital Output Mode Function		0	○
P06.05	Relay T1 Digit Output Selection		0	○
P06.06	Relay T2 Output Selection		0	○
P06.07	DO5 Function Select Ion Of Output Terminals (Extension Card)		0	○

Digit output terminal function table:

Set Value	Function	Description
0	Disabled	There have no function on output terminals
1	Inverter in running	It indicate the inverter is in running state, have the output frequency(can be zero), the output ON signal.
2	Forward running	It indicate the inverter is in forward running state, there have output frequency, output ON signal at this time.
3	Reverse running	It indicate the inverter is in reverser running state, there have output frequency, output ON signal at this time.
4	JOG running	It indicate the inverter is in jog running state, output ON signal at this time.
5	Inverter fault	When the inverter fails and downtime, output ON signal.
6	Pre excitation	When the inverter in excitation, output ON signal.
7	Frequency inverter ready running	When the main circuit and control circuit of supply is stable, and the inverter not detected any failure information, the inverter in the

		running, output ON signal.
8	Overload pre-warning	Before overload protection, according to the overload forecasting warning threshold value to judge, after more than forecasting warning threshold output ON signal. Parameter set refer to the function code P13.04, P13.05, P13.08.
9	Off load pre-warning	Before offload protection, according to the overload forecasting warning threshold value to judge, after more than forecasting warning threshold output ON signal. Parameter set refer to the function code P13.06, P13.07, P13.08.
10	Frequency level detection FDT1 output	Please refer to the function code P09.10, P09.11 specification
11	Frequency level detection FDT2 output	Please refer to the function code P09.12, P09.13 specification
12	Zero speed running 1 （have no output when stop）	When frequency inverter is running and the output frequency is 0, the output ON signal. When inverter is in a state of downtime, the signal is OFF.
13	Frequency reached	When the output frequency of inverter into the set frequency detection range, output ON signal, see the function code P0.09.
14	Frequency upper limit reached	When operation frequency reach to the upper limit frequency, output ON signal.
15	Frequency lower limit reached	When operation frequency reach to the lower limit frequency, output ON signal. When inverter is in a state of downtime, the signal is OFF.
16	Set count value reached	When the count reach to the set value of P09.27, the output ON signal. Counting function reference function group P09.
17	Designated count value reached	When the count reach to the set value of P09.28, the output ON signal.
18	Complete of simple PLC stage	After finished each stage of a PLC, output a pulse signal whit 250ms width.
19	Simple PLC circulate complete	After finished a cycle of a PLC, output a pulse signal whit 250ms width.
20	External equipment fault enabled	When external fault signal.
21	Accumulative running time reached	When frequency inverter in the total run time more than the setting time of P09.30, output ON signal.
22	Accumulative power-on time reached	When frequency inverter in the total on power time more than the setting time of P09.31, output ON signal.
23	Current running time reached	When frequency inverter run time more than the setting time of P09.32, output ON signal.
24	Current power-on time reached	When frequency inverter on power time more than the setting time of P09.33 output ON signal.

25	Any frequency reached	When the output frequency of inverter into the detection range of set arbitrary frequency, output ON signal. See the function code P09.34, P09.35.
26	Any current reached	When the output frequency of inverter into the detection range of set arbitrary frequency, output ON signal. See the function code P09.36, P09.37.
27	Current limit exceeded	The output current of inverter exceed the set current. See the function code P013.09~P13.11.
28	Communication virtual terminal output	The DO output terminals of frequency converter is controlled by communication. Please refer to the communication protocol.
30	Communication virtual terminal output	When the inverter is in a state of downtime and output ON signal or frequency converter in the run immediately when receives the stop command output ON signal.
31	Run (non-jog run)	When inverter is in jog running, output ON signal.
32	Length reached	When length counting reach to set length, output ON signal. See the function code P09.25, P09.26.
33	Braking timing output	The timing output function of inverter. See the function code P09.57, P09.58.

P06.08	AO1 Analog Output Function	0~25, see table below	0	○
P06.09	AO2 Output Selection		0	○
P06.10	HDO1 Pulse Output Functions		0	○

Analog output AO1 and AO2 output range is 0V~10V or 0/4mA~20mA. HDO1 terminal output pulse frequency range is 0.01kHz~P06.01(the output max frequency of HDO1 pulse output mode), P06.01 can be set from 0.01kHz~100.00kHz.

Pulse or analog signal output 0.0%~100.0% corresponding function as below table:

Set value	Function	Description
0	Running frequency	100.0% Corresponding the maximum output frequency
1	Set frequency	100.0% Corresponding the maximum output frequency
2	Output current 1	100.0% Corresponding 2 times of rated motor current
3	Output voltage1	100.0% Corresponding 1.5 times of rated inverter voltage
4	Motor rotational speed	100.0% Corresponding 2 times of rated motor speed
5	Output power	100.0% Corresponding 2 times of rated motor power

6	High speed pulse HDI input value	100% corresponding HDO1 output upper limit
7	AI1 input value	0.00V~10.00V
8	AI2 input value	0.00V~10.00V (Or corresponding 0.00mA~20.00mA)
9	AI3 input value(extension card)	0.00V~10.00V (Or corresponding 0.00mA~20.00mA)
10	Reserved	
11	Count value	0~Max count value
12	Output torque	100.0% corresponding 2 times of motor rated torque
13	Output current 2	0.0A~1000.0A
14	Output voltage 2	0.0V~1000.0V
15	Slope set frequency	100.0% corresponding max output frequency
16	Communication set value 1	Corresponding MODBUS communication set value 1
17	Communication set value 2	Corresponding MODBUS communication set value 2

P06.11	AO1 Output Voltage (Current) Lower Limit	0.00V~P06.13（0.00mA~P06.13）	0.00V	○
P06.12	Corresponding Setting Value of AO1 Voltage Output (Current) Lower Limit	0.0%~100.0%	0.0%	○
P06.13	AO1 Output Voltage (Current) Upper Limit	P06.11~10.00V（P06.11~20.00 mA）	10.00V	○
P06.14	Corresponding Setting Value of AO1 Output Voltage (Current) Upper Limit	0.0%~100.0%	100.0%	○
P06.15	AO1 Output Filter Time	0.000s~10.000s	0.000s	○
P06.16	AO2 Output Voltage (Current) Lower Limit	0.00V~P06.18（0.00mA~P06.18）	0.00V	○
P06.17	Corresponding Setting Value of AO2 Output Voltage (Current) Lower Limit	00.0%~100.0%	0.0%	○
P06.18	AO2 Output Voltage (Current) Upper Limit	P06.16~10.00V（P06.16~20.00 MA）	10.00V	○
P06.19	Corresponding Setting Value of AO2 Voltage (Current) Upper Limit	0.0%~100.0%	100.0%	○

P06.20	AO2 Output Filter Time	0.000s~10.000s	0.000s	○

The function code used to set the relation of analog output voltage and its representing set value.

When AO1, AO2 output is the current output, 1mA current is equal to 0.5V voltage, so 20mA current equal to10V.

When AO1 AO2 output is current output, it is suggested to add external resistor with less than 500Ω

P06.21	HDO1 Output Voltage (Current) Lower Limit	0.0%~P06.23	0.0%	○
P06.22	Lower Limit Corresponding HDO1 Output	0.00kHz~100.00kHz	0.0kHz	○
P06.23	HDO1 Output Upper Limit	P06.21~100.0%	100.0%	○
P06.24	Upper Limit Corresponding HDO1 Output	0.00kHz~100.00kHz	50.00kHz	○
P06.25	HDO1 Output Filter Time	0.000s~10.000s	0.000s	○

When selecting HDO1 terminals as pulse output, the function code is used to set value between the high-speed pulse output and its representative set value.

P06.26	DO1 Terminals Closed Delay	0.0s~6000.0s	0.0s	○
P06.27	DO1 Terminals Open Delay	0.0s~6000.0s	0.0s	○
P06.28	HDO1 Terminals Close Delay	0.0s~6000.0s	0.0s	○
P06.29	HDO2 Terminals Open Delay	0.0s~6000.0s	0.0s	○
P06.30	Relay T1 Close Delay	0.0s~6000.0s	0.0s	○
P06.31	Relay T1 Open Delay	0.0s~6000.0s	0.0s	○
P06.32	Relay T2 Close Delay	0.0s~6000.0s	0.0s	○
P06.33	Relay T2 Open Delay	0.0s~6000.0s	0.0s	○
P06.34	DO5 Terminals Close Delay	0.0s~6000.0s	0.0s	○
P06.35	DO5 Terminals Open Delay	0.0s~6000.0s	0.0s	○

Set output terminal DO1, HDO1, Relay T1, Relay T2 delay time from status change to actual output change. As below diagram:

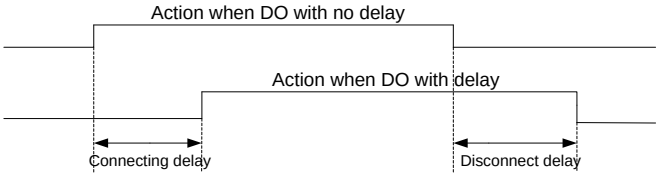

Fig. 6.7-1 DO connected delay and open delay diagram

6.8 P07 AIAO Correction Group

P07.00	AI1 Measured Voltage 1	0.500V～4.000V	Factory Correction	○
P07.01	AI1 Displayed Voltage 1	0.500V～4.000V	Factory Correction	○
P07.02	AI1 Measured Voltage 2	6.000V～9.999V	Factory Correction	○
P07.03	AI1 Displayed Voltage 2	6.000V～9.999V	Factory Correction	○
P07.04	AI2 Measured Voltage 1	0.500V～4.000V	Factory Correction	○
P07.05	AI2 Displayed Voltage 1	0.500V～4.000V	Factory Correction	○
P07.06	AI2 Measured Voltage 2	6.000V～9.999V	Factory Correction	○
P07.07	AI2 Displayed Voltage 2	6.000V～9.999V	Factory Correction	○
P07.08	AI3 Measured Voltage 1	0.500V～4.000V	Factory Correction	○
P07.09	AI3 Displayed Voltage 1	0.500V～4.000V	Factory Correction	○
P07.10	AI3 Measured Voltage 2	6.000V～9.999V	Factory Correction	○
P07.11	AI3 Displayed Voltage 2	6.000V～9.999V	Factory Correction	○

This group of function code used to correct the analog input AI, to eliminate the influence input port zero bias and gain of AI.

This group of function parameters have been corrected in the factory, will revert to the factory values after correction when factory reset. Generally don't to correction at the scene of the application.

Measured voltage means by measuring instruments such as multi-meter measure out the actual voltage. Display voltage, means the sampling voltage display values by frequency inverter, refer to the voltage display before AI correction of Group P28 (P28.16、P28.17、P28.18).

When correction, input two voltage values in each input port of AI, and input the value measured from multi-meter and read value by group P28 to function code accurately, the frequency inverter will correction the zero bias and gain of AI automatically.

P07.12	AO1 Target Voltage 1	0.500V～4.000V	Factory Correction	○
P07.13	AO1 Measured Voltage 1	0.500V～4.000V	Factory Correction	○
P07.14	AO1 Target Voltage 2	6.000V～9.999V	Factory Correction	○
P07.15	AO1 Measured Voltage 2	6.000V～9.999V	Factory Correction	○

P07.16	Target Voltage 1 Of AO2	0.500V～4.000V	Factory Correction	○
P07.17	AO2 Measured Voltage 1	0.500V～4.000V	Factory Correction	○
P07.18	AO2 Target Voltage 2	6.000V～9.999V	Factory Correction	○
P07.19	AO2 Measured Voltage 2	6.000V～9.999V	Factory Correction	○

This group of function code used to correct the analog output AO.

This group of function parameters have been corrected in the factory, will revert to the factory values after correction when factory reset. Generally don't to correction at the scene of the application.

Target voltage means the theory of inverter output voltage value. Measured voltage means by measuring instruments such as multi-meter measure out the actual voltage.

6.9 P08 Process PID Control Parameter Function

Process PID close loop control is adopting proportion(P), integration(I), Differential(D) 3 part composed regulator in control system, a control method to make feedback value and command value deviation to gradually decrease. It is applicable in flow, pressure, temperature etc. process control.

Proportional control (P): a control quantity in proportion with deviation

Integration Control (I): a control quantity in proportion with deviation integral value

Differential control (D): a control quantity in proportion with deviation change ratio, can forecast deviation change tendency, quick response to violate changes, improve dynamic performance. But is easily to introduce and amplify interference signal and resulting system unsteady, please consider carefully.

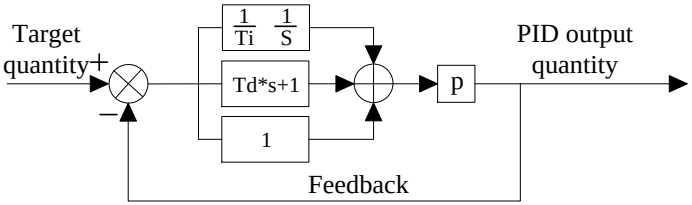

Fig 6.8-1 PID Control Principle Framework

P08.00	PID Command Source	0: Function code P08.01 1: AI1 2: Reserved 3: Reserved 4: Reserved 5: MS speed command 6: Communication setting 7: Keypad potentiometer	0	○

Set PID command source, when selecting manufacturer default 0, it is using keypad set PID target given value. The setup target value of the process PID is relative value, and the setup 100% is relative to full range of feedback signal of the controlled system. The system will always calculate according to the relative value (0 to 100%).

Note: When command source selecting PID output (P00.02 or P00.03 set as 8) then process PID control is effective.

P08.01	PID Command Set Value	0.0%~100.0%	50.0%	○

When PID command source selecting function code P08.01 set value, PID control command value is the set value of its function code.

P08.02	PID Command UP/DOWN Time	0.00s~100.00s	0.00S	○

Set PID command UP/DOWN time, the soft start function is to set UP/DOWN time to increase/decrease PID command value in PID control. The set time is the time required from 0.0% command increasing to 100.0% command, or from 100.0% command decreasing to 0.0% command.

P08.03	PID Feedback Source	0: AI1 1: AI2 2: AI3(extension card) 3: AI1-AI2 4: AI1+AI2	0	○

		5: MAX(AI1，AI2) 6: MIN(AI1，AI2) 7: HS Pulse input setting 8: Communication setting 9: Internal current feedback		

Set feedback source of PID close loop control, feedback input channel must be external input and cannot share the same channel with PID given channel. Otherwise it result PID control Disabled.

P08.04	PID Output Feature Selection	0: PID output Positive feature 1: PID output negative feature	0	○

PID output positive feature: When PID feedback is smaller than the PID command, deviation is positive, it needs to increase inverter output frequency to balance the PID.

PID output negative feature: When PID feedback is smaller than the PID command, deviation is positive, it needs to reduce inverter output frequency to balance the PID.

The function code and DI function(the reverse of PID action direction) do EO logic as the actual PID action direction.

P08.05	PID Feedback Display Coefficient	0.00~655.35（Users define）	1.00	○

PID feedback display coefficient: PID command value 100% (feedback meter full range) corresponding physical quantity in PID control system. Such as constant pressure water supply system, the pressure meter full range 30.0MPa, the PID feedback display coefficient set as 30.0, at this stage the status display function code PID setup P28.22, PID feedback P31.18 corresponding value unit is the physical unit of 0.1MPa.

P08.06	Proportional Gain 1	0.00~100.00	40.0	○
P08.07	Integral Time 1	0.00: Disabled integral 0.01s~10.00s	0.50s	○
P08.08	Differential Time 1	0.000s~10.000s	0.000s	○
P08.09	Proportional Gain 2	0.00~100.00	40.00	○
P08.10	Integral Time 2	0.00: Disabled integral 0.01s~10.00s	0.50s	○
P08.11	Differential Time 2	0.000s~10.000s	0.000s	○

In order to meet process PID control in complicate control application, the inverter has built-in 2groups separate PID control parameter.

Proportional gain (Kp): It decides the adjustment intensity of the whole PID regulator. The higher the P is, more powerful the adjustment intensity is. When this parameter is 100, indicating the deviation between PID feedback quantity and the reference quantity is 100%, the adjustment amplitude of the PID regulator on the output frequency command is maximum frequency (the integral and differential functions are neglected).

Integration time (Ti): It decides the PID regulator integration adjusting speed of the deviation which between the PID feedback quantity and the reference quantity. Integration time is the time within which the integration regulator (the proportional and differential functions are neglected) performs continuous adjustment and the adjustment quantity reaches maximum frequency (P00.07) when the deviation between the PID feedback quantity and reference quantity is 100%. The shorter the integration time is, more powerful the adjustment intensity is.

Differential time (Td): It decides the intensity of PID regulator adjusting the change rate of deviation between the PID feedback quantity and the reference quantity. Differential time is the time within

which if the feedback quantity changes 100%, the adjustment quantity reaches maximum frequency (P00.07) (proportional and integral functions are neglected). The longer the differential time is, more powerful the adjustment intensity is.

P08.12	PID Parameter Switchover Condition	0: No switchover(only use PID parameter 1) 1: DI terminals 2: According to deviation auto-switchover	0	○
P08.13	PID Parameter Switchover Deviation 1	0.0%~100.0%	20.0%	○
P08.14	PID Parameter Switchover Deviation 2	0.0%~100.0%	80.0%	○

2 set of independent PID control parameters can be set by P08.12 as not-switchover, DI terminal or automatic-switchover. If you choose to PID parameters automatically switchover, when a given and feedback error absolute value is less than the PID parameters switchover deviation 1 namely P08.13 set value, the PID control parameters selected PID parameter 1; when a given and feedback error absolute value is bigger than the PID parameters of deviation 2 namely P08.14 set value, the PID control parameters selected PID 2; When a given and feedback error absolute value between PID switchover deviation 1 and PID deviation 2, PID control parameters is linear interpolation of two groups of PID control parameters values. As shown in the figure below:

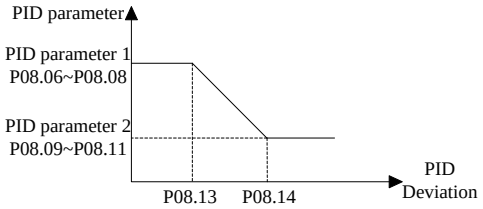

Fig 6.8-2 Schematic diagram for PID parameters automatically switchover

P08.15	PID Deviation Limit	0.0%~100.0%	0.0%	○

When the deviation of PID command and feedback is smaller than function code set value, PID regulator stop regulation, PID output maintains with no change, for some application it can increase PID regulator stability.

The corresponding relation of Deviation limit and output frequency as below diagram:

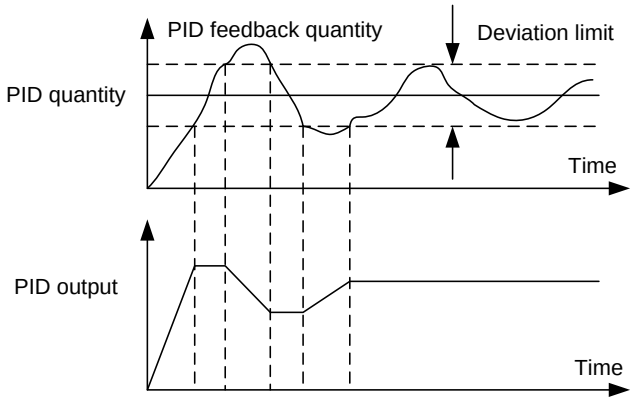

Fig. 6.8-3 PID deviation limit diagram

P08.16	PID Preset Output Mode	0: No preset output mode 1: Output according to holding time 2: Output when PID feedback< switchover threshold 3: Output when PID feedback> switchover threshold	0	◎
P08.17	PID Preset Output Value	0.0%~100.0% (as frequency command relative to max output frequency P00.07)	10.0%	○
P08.18	PID Preset Output Value Holding Time	0.00s~600.00s	0.50s	○
P08.19	PID Preset Output Switchover Threshold	0.0%~100.0% (relative to PID command value)	50.0%	○

When P08.16 set to non-zero, namely enable PID preset mode. Appropriate setting preset frequency preset holding time of PID preset frequency, or preset output switchover threshold, to avoid the inverter start initial feedback and command deviation limits and make the PID regulator saturation, can make the closed-loop regulating quickly into a stable stage and no obvious overshoot or oscillation.

After the PID run, frequency accelerate to PID preset point according to acceleration/deceleration time, and will keep run at the frequency point until it doesn't meet the PID preset output retention condition as in P08.16 set, then run according to PID regulator output. As below diagram P08.16 set as 1:

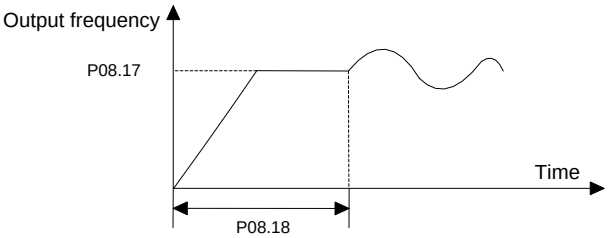

Fig 6.8-4 Schematic diagram if PID preset output

P08.20	Feedback Wire-break Detection Value	0.0%: No detection 0.1%~100.0%	0.0%	○
P08.21	Feedback Wire-break Detection Time	0.0s~20.0s	0.0s	○

If P08.20 set to a non-zero value, when the feedback signal is less than P08.20 set detection value but exceeding P08.21 setting time, it decided the PID feedback break line, system will report the PID feedback break line breakdown (Er023).

P08.22	Feedback Over-limit Detect Value	0.0%: No detection 0.1%~100.0%	0.0%	○
P08.23	Feedback Over-limit Detection Time	0.0s~20.0s	0.0s	○

When the feedback signal is bigger than P08.22 set detection value but exceeding P08.23 setting time, it decided the PID feedback exceeding limit, system will report the PID feedback exceeding limit breakdown (Er022).

P08.24	PID Dormant Threshold	P08.25~100.0%（PID feedback） 100%: Cancel the sleep function	100.0%	○
P08.25	PID Revive Threshold	0.0%~ P08.24（PID feedback）	0.0%	○
P08.26	PID Dormant Waiting Time	0.0s~6000.0s	1.0s	○
P08.27	PID Revive Waiting Time	0.0s~6000.0s	0.5s	○

PID dormancy: when the system detects that the PID feedback value is higher than PID dormancy threshold and maintain time exceeding than PID dormant waiting time , inverter will start decelerate according to the time set by the deceleration time, and later enter into a dormant state when frequency drop to zero. If in the above process PID feedback below the PID dormancy threshold, PID return back to regulating state, dormancy wait counting clear up. When this parameter is set to 100%, the PID dormancy function is Disabled.

PID awakening: when inverter is in PID dormant state, once if PID feedback below the PID revive threshold and maintain time exceeding than PID revive waiting time, inverter will exit dormant state and return back to PID regulating mode.

P08.28	PID Calculation Mode	0: Stop No calculation 1: Stop calculation	0	○

Used to decide whether to continue deal with PID arithmetic when inverter in stop status. General applications, in stop state inverter should stop PID calculation. The stop operation selection might be useful in constant pressure water supply system and other special occasions.

P08.29	PID Output Positive Max Value	0.0%~100.0%	100.0%	○
P08.30	PID Output Reverse Max Value	0.0%~100.0%	0.0%	○

PID output positive, negative max value, used to limit PID output modulation.

P08.31	PID Feed forward Source Selection	0: No feed forward 1: AI1 2: AI2 3: AI3(extension card) 4: HS pulse 5: Communication	0	○

In PID closed-loop control, the feed forward source is added to the PID control output, to improve the stability of the control system. Feed forward control scheme is applied to a system which require high linear velocity synchronization and quick response speed, such as wire drawing machine applications.

P08.32	PID Feed forward Gain	0.00~60.00	1.00	○

PID forward gain: the parameter is used to set feed forward source proportion relation.

P08.33	PID Output Positive Maximum Variation	0.0%~100.0%	2.0%	○
P08.34	PID Output Reverse Maximum Variation	0.0%~100.0%	2.0%	○

Operation of the inverter PID control, the parameter is used to set the variation ratio of PID actual output.

P08.36	PID Adjust Selection	0: Continue integration arriving upper and lower limit 1: Stop integration arriving upper and lower limits	0	○

When PID control operation and using integration function to decide whether continue integration when set upper/lower limit arrived.

Reach the upper/lower limit to continue integral: integral quantity has real-time response to the changes between given quantity and feedback quantity, unless the internal integral limit has been reached. When the size of trend between given quantity and feedback quantity changes, it takes longer time to offset continuous integration effect, so integration will follow the changing tendency.

Reach the upper and lower limit to stop integration: the integrating quantity remains with no change, when the size of trend between given quantity and feedback quantity varies, integration will quickly follow the tendency.

P08.37	Feedback Lower Limit when PID Action	0.0%: Unlimited 1%~100%	0.0%	○

Set the lower limit of the feedback of PID action, reduce the PID adjustment, in favor of the constant of output.

P08.38	PID Computing Benchmark (Not Including Feed forward)	0: Relative to feed forward amount 1: Relative to 100%	1	◎

PID arithmetic benchmark source selection

P08.39	PID output range (not including feed forward)	0.0: Unlimited 0.1~150%	100%	○

Set the output range of PID, control PID regulating variable, so control PID influence on the output.

P08.40	Lower Limit Frequency	0.00~50.00Hz	10.00	○

	Of Feedback Break Line Detection			

When the output frequency is lower than the frequency lower limit, don't detect break line.

6.10 P09 Special Function Parameter Group

P09.00	Jog Running Frequency	0.00Hz~P00.07 (max output frequency)	5.00Hz	○
P09.01	Jog Running Acceleration Time	0.0s~3600.0s	Model dependent	○
P09.02	Jog Running Deceleration Time	0.0s~3600.0s	Model Dependent	○

Target frequency and acceleration / deceleration time when setting jog operation, acceleration / deceleration time is the time needed when speeding up to P00.16 selected reference frequency.

Note: Start frequency, DC brake and other settings is neglect when jog, accelerate from 0 frequency, stop run when decelerate to 0 frequency.

P09.03	Acceleration Time 1	0.0s~3600.0s	Model Dependent	○
P09.04	Deceleration Time1	0.0s~3600.0s	Model Dependent	○
P09.05	Acceleration Time 2	0.0s~3600.0s	Model Dependent	○
P09.06	Deceleration Time2	0.0s~3600.0s	Model Dependent	○
P09.07	Acceleration Time 3	0.0s~3600.0s	Model Dependent	○
P09.08	Deceleration Time3	0.0s~3600.0s	Model dependent	○

Acceleration/deceleration time refers to the time needed that frequency from 0.00 Hz acceleration/deceleration to the reference frequency (P00.16), which is used to set frequency changing slope. There Provide 4 groups of acceleration/deceleration time to selection, through digital input terminal to choose parameters (refer to P05 parameter group). If there is no terminal input option to acceleration/deceleration, then terminal selection is disabled, so acceleration/deceleration time is group 0 accordingly.

P09.09	Set Frequency Reaching Detection Amplitude	0.00Hz~P00.07（maximum output frequency）	0.00Hz	○

When the output frequency is within positive/negative detecting range of preset frequency, DO output terminal output ON signal (the DO terminal has to set “set frequency arrival function). As below diagram (take MS speed set frequency to illustrate.):

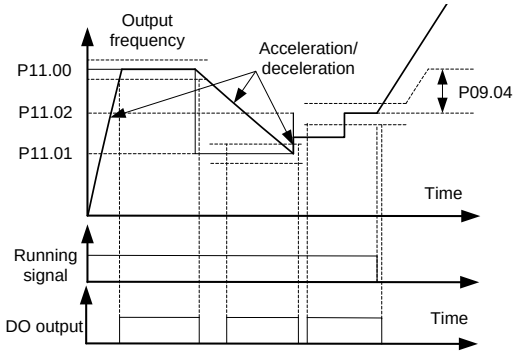

Fig 6.9-1 Diagram of Setting frequency arriving detecting amplitude

P09.10	Frequency Detection Value 1 (FDT1)	0.00Hz~P00.07（maximum output frequency）	50.00Hz	○
P09.11	Frequency Detection 1 Hysteresis Value	0.0%~100.0%（relative to FDT1）	5.0%	○
P09.12	Frequency Detection Value 1 (FDT2)	0.00Hz~P00.07（maximum output frequency）	50.00Hz	○
P09.13	Frequency Detection 2 Hysteresis Value	-100.0%~100.0%（relative to FDT2）	5.0%	○

Frequency detection FDT function: when the output frequency exceeds set frequency detection value, DO indicator signal FDT output is Enabled, until the output frequency drop below detection value and the difference value exceeding the lagged value, DO indicator signal FDT output is Disabled. On the max extent to enabled setting 2 FDT detecting points at the same time.

FDT lag amplitude = FDT detection value* FDT lag value.

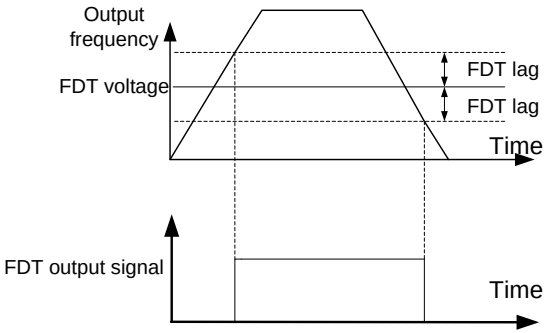

Fig 6.9-2 FDT signal diagram

P09.14	Swing Set Mode	0: Relative to the central frequency 1: Relative to the maximum frequency（Reserved）	0	●
P09.15	Swing Frequency Amplitude	0.0%: Close Swing function 0.1%~100.0%	0.0%	○
P09.16	Jump Frequency Amplitude	0.0%~50.0%	0.0%	○
P09.17	Swing Frequency Rise Time	0.0s~3000.0s	5.0s	○
P09.18	Swing Frequency Fall Time	0.0s~3000.0s	5.0s	○

The swing frequency function is applicable to the textile and chemical fiber fields and the applications where traversing and winding functions are required.

The swing frequency function means that the output frequency of the inverter swings up and down around the central of set frequency. The trace of running frequency at the time axis is shown in the figure below, of which the swing amplitude is set by P09.15. When P09.15 is set to 1, indicating the swing amplitude is 0, the swing frequency is disabled.

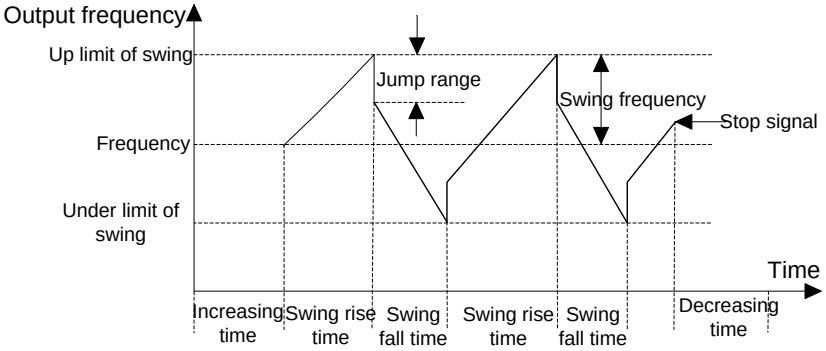

Fig 6.9-3 Schematic diagram for swing frequency work principle

Swing frequency set method is used to set swing amplitude reference quantity.

For central frequency (present set frequency) is relative to variable swing system. Swing amplitude changes according to central frequency changing.

Relative to max frequency is fixed swing amplitude system, the swing amplitude is fixed.

Swing amplitude: the frequency is restraint by upper/lower limit frequency.

Swing amplitude relative to central frequency: swing amplitude AW=central frequency*swing amplitude P09.15.

Swing amplitude relative to max frequency: swing amplitude AW=max frequency*swing amplitude P09.15.

Swing amplitude relative percentage set by Jump frequency amplitude P09.16, actual jump amplitude=swing amplitude AW*jump frequency amplitude P09.16.

Swing frequency rising time: the time needed run from the lowest point of swing frequency to the highest point.

Swing frequency falling time: the time needed falling from the highest point of swing frequency to the lowest point.

P09.19	Jump Frequency 1	0.00Hz~P00.07 (max output frequency)	0.00Hz	○
P09.20	Jump Frequency Amplitude 1	0.00Hz~P00.07 (max output frequency)	0.00Hz	○
P09.21	Jump Frequency 2	0.00Hz~P00.07 (max output frequency)	0.00Hz	○
P09.22	Jump Frequency Amplitude 2	0.00Hz~P00.07 (max output frequency)	0.00Hz	○
P09.23	Jump Frequency Amplitude 3	0.00Hz~P00.07(max output frequency)	0.00Hz	○
P09.24	Jump Frequency Amplitude 3	0.00Hz~P00.07(max output frequency)	0.00Hz	○

Swing frequency cycle: the sum of swing amplitude rising time and swing amplitude falling time

Jump frequency is that when target frequency fall within jump frequency range, actual run frequency will automatically adjust out of the jump frequency range to avoid mechanical resonance frequency point. As below diagram showed, actual run frequency fall onto the solid line:

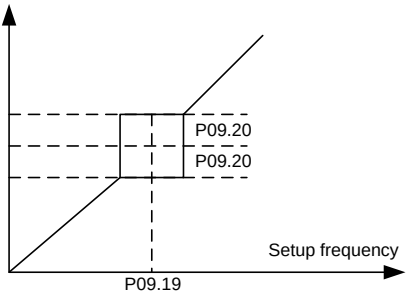

Fig6.9-4 Schematic diagram for Jump frequency

P09.27	Set Count Value	P09.28~65535	1000	○
P09.28	Designated Count Value	1~P09.27	500	○

The count value can set counter input DI function. When count value arrive at set counter value, digital output terminal output signal set by counter and counter stop counting. When the count value reaches the designated count value, the digital output terminal will output signal of designated counting value. The counter will continue count till the “setup counting value” is reached. The designated count value shall not exceed the setup count value.

Counter input DI function recommend using HS DI (HDI) terminal receipt, if input signal frequency is lower (<500Hz), can also use ordinary DI terminal.

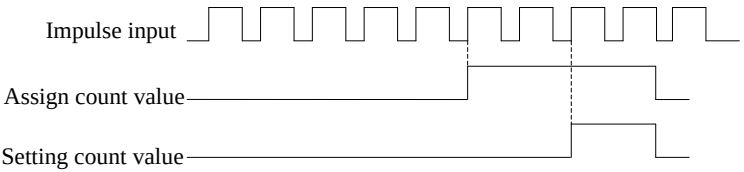

Fig 6.9-5 Diagram of setup counting value and designated counting value

P09.29	Droop Control Frequency Drop Rate	0.00Hz~10.00Hz	0.00Hz	○

This parameter adjust the inverter frequency change ratio of speed sagging. When several units of inverter drive the same load at the same time, due to speed variation resulting in load distribution unbalance, the inverter with higher speed will bear heavier load. The sagging control function can make speed sagging following the load increasing so to balance the load distribution.

P09.30	Accumulative Running Time Reached	0h~65535h	0h	○
P09.31	Accumulative Power-On Time Reached	0h~65535h	0h	○
P09.32	Current Running Time Reached	0min~65535min	0min	○
P09.33	Current Power-On Time Reached	0min~65535min	0min	○

The function code is used to set their own time of arrival, when the setting time, digital output terminals output corresponding DO signals (21 ~ 24 function).

P09.34	Any Frequency Reaching	0.00Hz~P00.07 (max output frequency)	0.00	○
P09.35	Any Frequency Reaching Detection Amplitude	0.00Hz~P09.34	0.00	○

When output frequency is within the positive/negative detection width range of any set frequency, DO output terminal output ON signal (the DO terminal has to be set as “random arrival frequency function”). As below diagram:

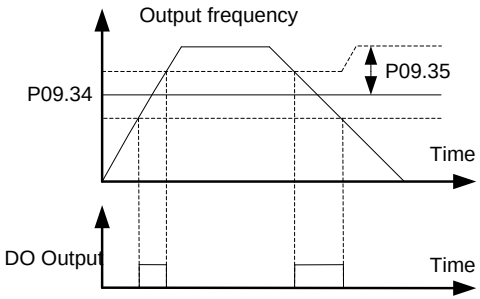

Fig 6.9-6 random arrival frequency detecting diagram

P09.36	Any Current Reaching	0.0%~300.0%	0.0%	○
P09.37	Any Current Reaching Detection Amplitude	0.0%~P09.36	0.0%	○

When output frequency is within positive/negative detection width range in any set current, DO output terminal output ON signal (the DO terminal has to be set as “random arrival current function”). As below diagram:

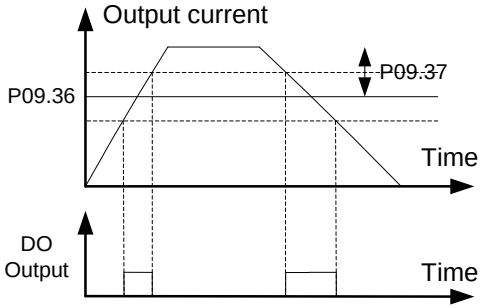

Fig 6.9-7 Random arrival current detecting diagram

P09.38	Electricity Consumption Initial Value Upper Bit	0 kwh~60000kwh	0kwh	○
P09.39	Electricity Consumption Initial Value Lower Bit	0 wh~999.9wh	0.0wh	○

Used for setting the initial value of power consumption. Electricity consumption initial value ＝ P09.38*1000+P09.39(°).

P09.40	Inverter Input Power Factor	0.00~1.0	0.86	○

Used to adjust AC input side current display value

P09.41	Keypad ^/V Fine Tuning Frequency and JOG/REV Fast Frequency Set	0x0000~0x1221 LED unit's digit: frequency control selection 0: Adjusting enabled 1: Keypad adjusting disabled LED ten's digit bit: frequency control selection 0: Only enabled when P00.02=1 or P00.03=1 1: All frequency mode are enabled 2: MS speed in priority, disabled for MS speed LED hundred's digit: stop action selection 0: Setup enabled 1: Enabled in run, clear after stop 2: Enabled in run, clear upon receiving stop command LED thousand's digit: ^/v key integration function 0: Integration function enabled 1: Integration function disabled	0x0000	○

Used to set inverter keypad v/^ key function selection.

P09.42	^/V Key Integration Rate	0.01s~10.0s	1.0s	○

If select v/^ key integration function enabled, the parameter is used to set v/^ key integration rate value, the bigger the value is, the smaller the change rate is.

P09.43	UP/DOWN Terminals Control Set	0x000~0x221 LED unit's digit: frequency control selection 0: UP/DOWN terminals setting enabled 1: UP/DOWN terminals setting disabled LED ten's digit: Frequency control selection 0: Only enabled when P00.02=1or P00.03=1 1: All frequency mode are enabled 2: When the multi-step speed are priority, it is disabled to the multi-step speed LED hundred's digit: action selection when stop 0: Setting enabled 1: Enabled in run , clear after stop 2: Enabled in run , clear upon receiving stop command	0x000	○

Used to set terminal UP/DOWN function selection

P09.44	UP/DOWN Terminals Frequency Change Rate	0.01Hz/s ~50.0Hz/s	1.00Hz/s	○

If choosing terminals UP/DOWN function, set the parameters used in the terminal UP/DOWN the size of the function change rate, the greater the value, the greater the rate of change.

P09.45	Frequency Setting at Power Loss Action Selection	0x000~0x111 LED unit's digit: action selection when digital adjustment frequency with power off 0: Save when power off 1: Clear when power off LED ten's digit: action selection when Modbus setting frequency power off 0: Save when power off 1: Clear when power off LED hundred's digit: action selection when other Communication set frequency power off 0: Save when power off 1: Clear when power off	0x000	○

Used to set when the inverter power electricity again, select whether frequency is memory or storage when power failure.

P09.46	PWM Selection	0x00~0x21 LED unit's digit: PWM mode selection 0: PWM mode 1, PWM mode1, 3phase modulation and 2phase -modulation 1: PWM mode2, three-phase modulation LED ten's digit: PWM low speed carrier limit 0: Low speed carrier limit, carrier limit mode 1 1: Low speed carrier limit, carrier limit mode 2 2: Low speed carrier no-limit	0x01	◎

Used to set the PWM's adjust method of inverter output and the limit of carrier frequency switch.

P09.47	Zero Frequency Output Selection	0: No voltage output 1: Voltage output 2: According to the stop DC braking current output	0	○

Used for setting the output of the inverter at zero frequency output mode selection. Such as system at zero frequency runtime motor need to keep a certain tension and torque in order to maintain system can set the appropriate parameters to achieve purpose.

P09.48	Action after Accumulative Power-On and Run Time Reached	0: Output terminals action, error alarm 1: Output terminals action, no error alarm	0	○

Used to set whether inverter will alarm when the accumulative power-on and run time reached.

Output terminal action, error alarming: the inverter output DO action and meanwhile alarming Er027(if run time arrived) or alarming Er08(power-on time reached) and instantly stop.

Output terminal action, no alarming fault: the inverter only output DO action, such as run signal effectively, will continue to keep run status.

P09.49	Motor Power Correction Coefficient	0.00%~200.0%	100.0%	○

Used for correcting the motor power coefficient.

P09.50	User-Defined Fault Selection	The Unit of LED 0: Disabled run after fault 1: Jog running after fault Ten's digit of LED 0: Coast to stop 1: Decelerate to stop	0x00	○

Used for setting inverter disposal method after receiving user defined error input signal.

P09.55	Jog Preferred Selection	0: Enabled 1: Disabled	0	○

When jog run is priority to choose, inverter has received the operation signal, receiving jog run signal

again, priority jog run signal, otherwise, the first received signal.

P09.56	Auto-start Selection after Manual Reset	0: Disabled 1: Enabled	0	○

Manual reset from the start allows the inverter in the running due to the failure signal to stop, manual reset the fault, inverter will start again.

P09.57	Stop brake Frequency	0.00Hz~50.00Hz	1.50Hz	○
P09.58	Stop brake Time	0.0s~60.0s	2.0s	○

This set of function code used in braking output timing code. When the output frequency is lower than P09.57 (stop braking frequency) set frequency, the function of DO 33 (braking timing output) outputs ON signal, and continuous P09.58 (stop braking time) the set time.

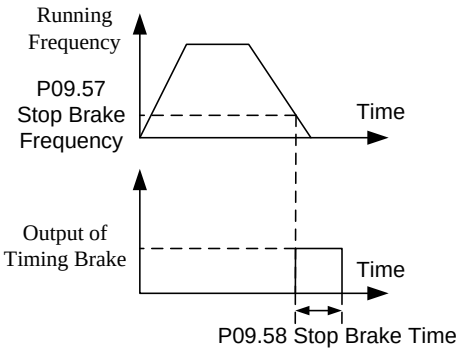

6.11 P10 Keyboard and Display

P10.00	STOP/RESET Key Stop Function	0: Only enabled to keyboard control panel 1: Enabled to control panel and terminals at the same time 2: Enabled to control panel and communication at the same time 3: Enabled to all control mode	0	○

This parameter is used to set STOP/RESET key function selection.

RESET function is always enabled, no matter what value is set for the parameter.

P10.01	REV/JOG Key Function	0: No function 1: Jog running 2: FWD/REV switchover 3: Coast to stop 4: Clear up/down & ^/v key setup frequency 5: Shift key switchover display state 6: Realize run command pre-set mode according to sequence switchover 7: Quick debugging mode(according to factory parameter debugging) 8: Modify rapidly set frequency	1	◎

This parameter is used to set JOG/REV button function selection

P10.02	JOG/REV Key Run Command Channel Switchover Sequential Selection	0: Keyboard control←→ terminal control 1: Keyboard control --communication control 2: Terminal control ←→communication control 3: Keyboard control →terminals Control →communication control	3	○

When P10.01 set as 6, this parameter is used to set JOG/REV button function selection.

P10.03	Display Running Lower Bit	0x0000~0xffff BIT0: Running frequency (Hz light on) BIT1: Sett frequency(Hz flash) BIT2: Bus voltage(V light on） BIT3: Output voltage(V light on) BIT4: Output current(A light on) BIT5: Run speed(RPM on） BIT6: Output power(% light on) BIT7: Output torque (% light on) BIT8: PID setting value (% flash） BIT9: PID Feedback value(% light on) BIT10: State of input terminals	0x003F	○

		BIT11: State of output terminals BIT12: Torque setting value (% light on) BIT13: Pulse counting value BIT14: PLC current stage in multi stage-speed BIT15: Slope frequency setting value(Hz light on)		
P10.04	Operation Display Upper Bit	0x0000~0xffff BIT0: Analog AI1 value（V light on） BIT1: Analog AI2 value（V light on） BIT2: Analog AI3 value(extension card) (V light on) BIT3: HS pulse HDI frequency BIT4: Motor overload percentage(% light on) BIT5: Inverter overload percentage(% light on) BIT6: Reserved BIT7: Excitation current (A light on） BIT8: Torque current (A light on） BIT9: AC input current (A light on) BIT10: User-defined speed 1(Running value) BIT11: User-defined speed 2(Running value) BIT12~BIT15: Reserved	0x0000	○

Inverter in run condition, parameter display is subjected to the function code, which is a 16 bit binary number, if one bit is 1, the corresponding parameters of the bit at run time, can see through the shift key. If the bit is 0, then the corresponding parameters will not be displayed. The lower the bit is, the higher the display priority is.

Comparison table of operating display low bit P10.03		Comparison table of operating display low bit P10.04	
Corresponding display parameter	Hexadecimal	Corresponding display parameter	Hexadecimal
Running frequency(Hz ON)	0x0001	AI1 voltage(V ON)	0x0001
Setting frequency(Hz flash)	0x0002	AI2 voltage(V ON)	0x0002
Bus voltage(V ON)	0x0004	Analog AI3 value(extension card)(V ON)	0x0004
Output voltage(V ON)	0x0008	HS pulse HDI frequency	0x0008
Output current(A ON)	0x0010	Motor overload percentage(% ON)	0x0010

Motor rotating speed(RPM ON)	0x0020	Inverter overload percentage(% ON)	0x0020
Output power(% ON)	0x0040	Linear speed	0x0040
Output torque(% ON)	0x0080	Excitation current(A ON)	0x0080
PID setting value(% flash)	0x0100	Torque current(A ON)	0x0100
PID feedback value(% ON)	0x0200	AC line-in current (A ON)	0x0200
Input terminal state	0x0400		
Output terminal state	0x0800		
Torque setting value(% ON)	0x1000		
Pulse counting value	0x2000		
PLC & MC speed present stage	0x4000		
Slope frequency setting value(Hz ON)	0x8000		

Example 1: for example while runtime only need to display motor rotating speed, other parameters do not need to be displayed.

Motor rotating speed display is at lower bit P10.03, corresponding hexadecimal 0x0020, run display high bit parameter is 0, then set P10.03=0*0020, P10.04=0x0000.

Example 2: such as constant pressure water supply system only need to display the real-time pressure value, which shows the inverter PID feedback, other parameters do not need to display. PID feedback in shown at low bit P10.03 which corresponding hexadecimal 0x0200, run shown high bit is all 0, and set P10.03 = 0 x0200, P10.04 x0000 = 0.

Note: if need to display the pressure units at run time, it must be properly set P08.05 parameters.

Example 3: such as the need to display the operation of the inverter frequency and the output current and other parameters are not displayed. Inverter output frequency is in the run showed low P10.03, corresponding to the hex 0 x0001; Inverter output current is in the run showed low P10.03, corresponding to the hex 0 x0010; This set P10.03 = 0 x0001 + 0 x0010 = 0 x0011, P10.04 x0000 = 0. At this time to shift by pressing the shift key until the operation of the need to look at the inverter frequency and the output current.

P10.05	Display Stop	0x0000~0xffff BIT0: Set frequency (Hz flash） BIT1: Bus voltage (V light on） BIT2: State of input terminals BIT3: State of output terminals BIT4: PID setting value (% flash） BIT5: PID Feedback value (% on) BIT6: Torque setting value (% on） BIT7: Analog AI1 (V light on） BIT8: Analog AI2 (V light on） BIT9: Analog AI3 (extension card) (V	0x0003	○

		light on) BIT10: High speed pulse HDI frequency BIT11: PLC present stage of multi stage speed BIT12: Pulse counting value BIT13: User-defined speed 1(Set value) BIT14: User-defined speed 2(Set value) BIT15: Reserved		

Inverter in stop state, the parameters according to the function code, which is a 16 bit binary number, if one is 1, then the corresponding parameters can be during downtime, can see through the shift key. If the bit is 0, then the corresponding parameters will not be displayed. The lower bits, the higher the display priority is. Please refer to the operation display parameters detailed setting method.

Stop display parameter P10.05 corresponding table	
Corresponding display parameter	Hexadecimal
Set frequency (Hz on)	0x0001
Bus voltage (V on)	0x0002
Input terminal state	0x0004
Output terminal state	0x0008
PID given value (% flash)	0x0010
PID feedback value (% on)	0x0020
Torque set value (% on)	0x0040
Analog AI1 value (V on)	0x0080
Analog AI2 value (V on)	0x0100
Analog AI3 value (extended card) (V on)	0x0200
HS pulse HDI frequency	0x0400
PLC & MS speed present stage	0x0800
Pulse count value	0x1000
User-defined speed 1 (Set value)	0x2000
User-defined speed 2 (Set value)	0x4000

P10.06	User-Defined Speed 1 Coefficient	0.00~60.00 User-defined speed= Running frequency*P10.06	1.00	○

Used for correct the display the coefficient of user-defined speed 1. After user change the user-defined speed 1 coefficient, inverter LED displayed actual frequency = frequency * P10.06.

P10.07	User-Defined Speed 2 Coefficient	0.00~60.00 User-defined speed=mechanic RPM*P10.07	1.00	○

Used for correct the coefficient of load speed display. After user changing the user-defined speed 2 coefficient, inverter LED actual display user-defined speed 2 = RPM* P10.07.

6.12 P11 MS Speed Function And Simple PLC Function

MS frequency given as frequency mode is applied in MS speed run mode and simple PLC run mode. When frequency source command A or B is selected as MS speed command, inverter run frequency is MS speed mode.

P11.00	Multi-reference 0	-100.0%~100.0%	0.0%	○
P11.01	Multi-reference 1	-100.0%~100.0%	0.0%	○
P11.02	Multi-reference 2	-100.0%~100.0%	0.0%	○
P11.03	Multi-reference 3	-100.0%~100.0%	0.0%	○
P11.04	Multi-reference 4	-100.0%~100.0%	0.0%	○
P11.05	Multi-reference 5	-100.0%~100.0%	0.0%	○
P11.06	Multi-reference 6	-100.0%~100.0%	0.0%	○
P11.07	Multi-reference 7	-100.0%~100.0%	0.0%	○
P11.08	Multi-reference 8	-100.0%~100.0%	0.0%	○
P11.09	Multi-reference 9	-100.0%~100.0%	0.0%	○
P11.10	Multi-reference 10	-100.0%~100.0%	0.0%	○
P11.11	Multi-reference 11	-100.0%~100.0%	0.0%	○
P11.12	Multi-reference 12	-100.0%~100.0%	0.0%	○
P11.13	Multi-reference 13	-100.0%~100.0%	0.0%	○
P11.14	Multi-reference 14	-100.0%~100.0%	0.0%	○
P11.15	Multi-reference 15	-100.0%~100.0%	0.0%	○

MS speed command 100.0% is corresponding max output frequency P00.07, minus sign stand for reverse run. The inverter can set 16stage speed, selected by combined code via external terminal DIin1, DIin2, DIin3, DIin4, separately corresponding to MS speed 0 to MS speed 15.

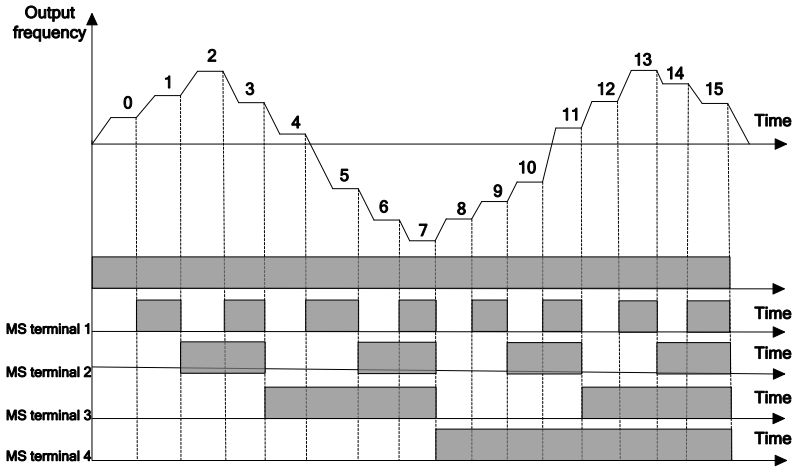

Fig 6.12-1 Multistage speed operation schematic diagram

As shown in the above, when only need 2 stages of speed then one input terminal is required, by the same token, when there need 3~4 stages of speed then two input terminals are required, and when there need 5 ~ 8 stages of speed then three input terminal are required, and when there need 9~16 stages of speed then 4 input terminal are required.

16 stage speed operating logic diagram DIn1 = DIn2 = DIn3 = DIn4 = OFF, the frequency setup mode of multistage speed command 0 is set by the code P00.12. DIn1 = DIn2 = DIn3 = DIn4 terminal is not all OFF, multistage speed operating, the priority of the multistage speed is higher than the keyboard, , analogue, HS pulse, PLC, communication frequency input, via DIn1, DIn2, DIn3, DIn4 combined coding, there is 16stage speed to be chosen on max extent.

The start/stop of MS speed operating is also decided by P00.01, the relation between DIn1, DIn2, DIn3, DIn4 terminals and multistage speed is shown in the following table.

DIn1	OFF	ON	OFF	ON	OFF	ON	OFF	ON	OFF	ON	OFF	ON	OFF	ON	OFF	ON
DIn2	OFF	OFF	ON	ON	OFF	OFF	ON	ON	OFF	OFF	ON	ON	OFF	OFF	ON	ON
DIn3	OFF	OFF	OFF	OFF	ON	ON	ON	ON	OFF	OFF	OFF	OFF	ON	ON	ON	ON
DIn4	OFF	OFF	OFF	OFF	OFF	OFF	OFF	OFF	ON	ON	ON	ON	ON	ON	ON	ON
	0	1	2	3	4	5	6	7	8	9	10	11	12	13	14	15

WARNING

● The MS speed command priority is the highest in all frequency command sources, when the multistage speed arbitrary terminals function is Enabled, multistage speed command is preferred.

P11.16	Simple PLC	0: Stop after the inverter runs one cycle 1: Keep final value after the inverter runs one cycle 2: Repeat after the inverter runs one cycle	0	○

The parameter is used for setting PLC cycle run mode.

Stop after completion of one cycle: the inverter will automatically stop upon completion of one single cycle, and will not restart until another run command is given to start.

Keep final value upon completion of one-time run: the inverter will automatically keep the run frequency and direction of latest stage after completion of one single cycle.

Cycle operation: The inverter will automatically start next one cycle upon completion of one cycle, and will not stop until stop command is given.

P11.17	PLC Restart Mode Selection	0: Restart from reference 1 1: Restart from the stage of interruption time frequency	0	○

This parameter is used to set simple PLC restart after stopped, whether to choose to restart run or run from interrupted stage.

P11.18	Simple PLC Retentive	0: Retentive at power failure 1: Non- retentive at power failure	0	○

This parameter is used to set memory selection when simple PLC stopped or power loss.

P11.19	MS Time Unit Setup	0: S (second) 1: Min (minute)	0	◎

This parameter is used to set the run time unit selection of simple PLC.

P11.20	Time of Reference 0	0.0s（h）~6000.0s（h）	0.0s	○
P11.21	Acceleration/Deceleration Time of Reference 0	0~3	0	○
P11.22	Time of Reference 1	0.0s（h）~6000.0s（h）	0.0s	○
P11.23	Acceleration/Deceleration Time of Reference 1	0~3	0	○
P11.24	Time of Reference 2	0.0s（h）~6000.0s（h）	0.0s	○
P11.25	Acceleration/Deceleration Time of Reference 2	0~3	0	○
P11.26	Time of Reference 3	0.0s（h）~6000.0s（h）	0.0s	○
P11.27	Acceleration/Deceleration Time of Reference 3	0~3	0	○
P11.28	Time of Reference 4	0.0s（h）~6000.0s（h）	0.0s	○
P11.29	Acceleration/Deceleration Time of Reference 4	0~3	0	○
P11.30	Time of Reference 5	0.0s（h）~6000.0s（h）	0.0s	○
P11.31	Acceleration/Deceleration Time of Reference 5	0~3	0	○
P11.32	Time of Reference 6	0.0s（h）~6000.0s（h）	0.0s	○

P11.33	Acceleration/Deceleration Time of Reference 6	0~3	0	○
P11.34	Time of Reference 7	0.0s（h）~6000.0s（h）	0.0s	○
P11.35	Acceleration/Deceleration Time of Reference 7	0~3	0	○
P11.36	Time of Reference 8	0.0s（h）~6000.0s（h）	0.0s	○
P11.37	Acceleration/Deceleration Time of Reference 8	0~3	0	○
P11.38	Time of Reference 9	0.0s（h）~6000.0s（h）	0.0s	○
P11.39	Acceleration/Deceleration Time of Reference 9	0~3	0	○
P11.40	Time of Reference 10	0.0s（h）~6000.0s（h）	0.0s	○
P11.41	Acceleration/Deceleration Time of Reference 10	0~3	0	○
P11.42	Time of Reference 11	0.0s（h）~6000.0s（h）	0.0s	○
P11.43	Acceleration/Deceleration Time of Reference 11	0~3	0	○
P11.44	Time of Reference 12	0.0s（h）~6000.0s（h）	0.0s	○
P11.45	Acceleration/Deceleration Time of Reference 12	0~3	0	○
P11.46	Time of Reference 13	0.0s（h）~6000.0s（h）	0.0s	○
P11.47	Acceleration/Deceleration Time of Reference 13	0~3	0	○
P11.48	Time of Reference 14	0.0s（h）~6000.0s（h）	0.0s	○
P11.49	Acceleration/Deceleration Time of Reference 14	0~3	0	○
P11.50	Time of Reference 15	0.0s（h）~6000.0s（h）	0.0s	○
P11.51	Acceleration/Deceleration Time of Reference 15	0~3	0	○

The above parameters are used to set the run time of each stage and the Acceleration/down time of each stage in simple PLC operation, the run frequency of each stage and run direction is corresponding to each stage of MS speed. If one stage run time is 0, then no matter how operating frequency is this stage will be jumped over, if one stage run time is not 0 but run frequency is 0, the inverter will keep output as zero frequency within this stage.

P11.52	Acceleration/Deceleration Time of Multi-stage Speed	0: Function code to determine 1: Terminal to determine	0	○

Selecting MS speed of Acceleration deceleration time can decided by simple PLC corresponding to each section of acceleration and deceleration time, can also be decided by the 4 acceleration and deceleration time selected by terminal DI (can refer to group P5 in Schedule 2 --acceleration and deceleration time select terminal function explanation).

6.13 P13 Protection Function Parameters Group

P13.00	Motor 1 Overload Protection Selection	0: Disabled 1: Ordinary motor(with low speed compensation) 2: Variable frequency motor (without low speed compensation)	2	○
P13.01	Motor 1 Overload Protection Coefficient	20.0%~200.0%	100.0%	○
P13.02	Motor 2 Overload Protection Selection	0: Disabled 1: Ordinary motor(with low speed compensation) 2: Various frequency inverter(without low speed compensation)	2	○
P13.03	Motor 2 Overload Protection Coefficient	20.0%~200.0%	100.0%	○

Start motor overload software protection function, via checking the inverse time limit curve feature when inverter has motor overload protection, in order to judge if motor is in overload state.

Closing motor overload software protection function, may has the risk of overheat damage to motor, it is highly recommended to add a thermal relay between inverter and motor to protect motor when setting the parameter.

The inverse time limit curve of motor overload protection default as: 200% motor rate current, last 1min then alarming motor overload error; 120% motor rate current, keep 60min then alarming motor overload error. Via adjusting motor overload protection coefficient to smoothening motor overload curve, to meet the actual application of specific motor.

The bigger the overload protection coefficient is, the longer the overload time is.

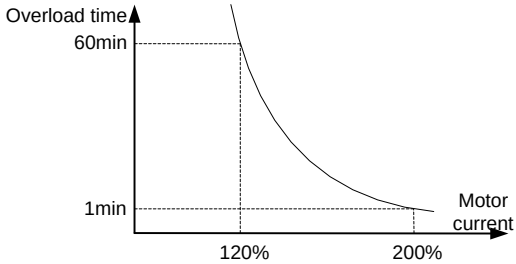

Fig 6.12-1 Motor overload curve

P13.04	Inverter or Motor Overload Warning Detection level	50%~200%	G: 150% P: 120%	○
P13.05	Inverter or Motor Overload Warning Detection Time	0.0s~3600.0s	1.0s	○

Inverter or motor overload pre-alarming detection level: before inverter or motor overload error protection, through DO send a pre-alarm signal to control system. The pre-alarm factor is to decide what time to pre-alarm before inverter or motor overload protection. The bigger the value is, the smaller the pre-alarm advanced quantity is.

Inverter or motor overload pre-alarming detection time: DO output overload pre-alarm signal, when overload pre-alarm occurred and greater than overload pre-alarm detection time. As below diagram:

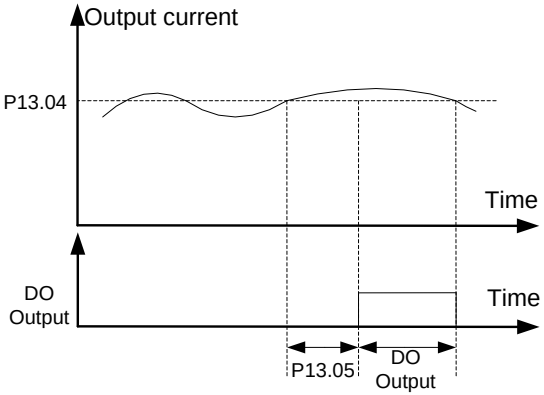

FIG 6.12-2 Detection of overload pre-alarm

P13.06	Inverter or Motor Offload Warning Detection level	0%~P13.04	50%	○
P13.07	Inverter or Motor Offload Warning Detection Time	0.0s~3600.0s	1.0s	○

Inverter or motor offload pre-alarm detection level: before inverter or motor offload error protection, through DO send a pre-alarm signal to control system. The pre-alarm coefficient is to decide what time to pre-alarm before inverter or motor offload protection. The bigger the value is, the bigger the pre-alarm advanced quantity is.

Inverter or motor offload pre-alarm detection time: DO output offload pre-alarm signal, when offload pre-alarm occurred and greater than offload pre-alarm detection time. As below diagram:

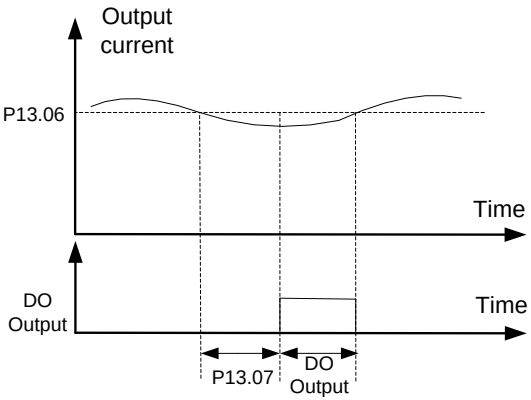

FIG 6.12-3 Offload pre-alarm detection

P13.08	Inverter or Motor Overload/Offload Warning Selection	0x000~0x131 Led unit's digit: 0: Motor overload/offload warning, relative to the rated current of the motor 1: Inverter overload/offload warning, relative to the rated current of inverter Led ten's digit: 0: Inverter continues to work after overload/offload warning 1: Inverter continues to work after offload warning and stop to run after overload warning 2: Inverter continues to work after overload alarm and stop to run after offload warning 3: Inverter stops after offload/overload warning Led hundred's digit: 0: Detection all the time 1: Detection in the constant speed run	0x000	○

The parameter is used to whether to selecting inverter pre-alarm function or motor pre-alarm function etc. Such as pre-alarm detection method and the disposal method after pre-alarming.

P13.09	Output Over-current Detection Value	0.0%: No detection 0.1%~300.0%	0.0%	○
P13.10	Output Over-current Detection Time	0.0s~100.0s	0.0s	○
P13.11	Output Over-current Action	0: Terminal output 1: Terminal output, alarm Er016 2: Terminal output, alarm Er016 when constant speed run 3: Terminal output in the constant speed run	0	○

This group of function code is used to set detecting motor output current, output current over limit detection delay time, DO action and inverter to detection result whether do the fault handling etc. If choose error alarming then inverter will stop run. As below diagram:

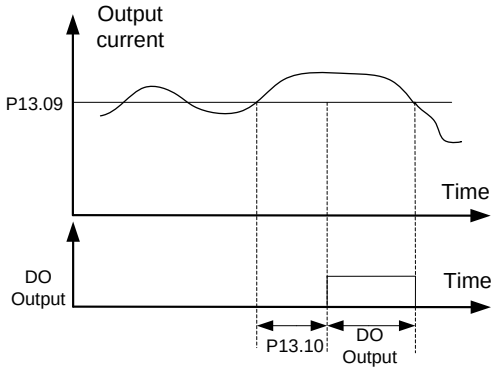

FIG 6.12-4 Diagram of output current over limit detecting

P13.12	Overvoltage Stall Protective	0: Disabled 1: Enabled	1	○
P13.13	Overvoltage Stall Protective Voltage	120%~150%（standard bus voltage, 380V）	140%	○
		120%~150%（standard bus voltage）(220V)	120%	

Used for setting the overvoltage threshold voltage of inverter DC bus and overvoltage whether to open stall protection. For larger inertia but with no configured braking circuit, if prohibit overvoltage stall protection inverter will easily jump over overvoltage error, if open overvoltage stall protection then resulting in inverter actual decelerating time will be delayed. If inverter built-in braking unit and configured braking resistor. P13.13 is the braking unit threshold voltage when overvoltage.

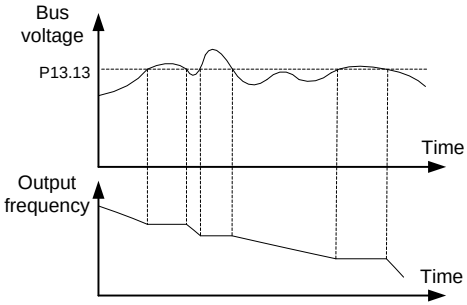

Fig 6.12-5 Diagram of over voltage under speed

P13.14	Dynamic Braking Enable	0: Disabled 1: Enabled	1	○
P13.15	Dynamic Braking Voltage	200.0VDC~2000.0VDC	220VAC corresponding: 380.0VDC 380VAC corresponding: 700.0VDC	○

The above parameter is used to open inverter energy consumption braking voltage threshold, when inverter configured braking unit.

P13.16	Current Limit Selection	0x00~0x11 Led unit's digit: current limiting action selection 0: Disabled current limiting action 1: Enabled for current limiting action Led ten's digit: hardware current limiting overload alarm selection 0: Hardware current limiting overload alarm enabled 1: Hardware current limiting overload alarm disabled	0x01	◎
P13.17	Automatic Current Limit Level	50.0%~200.0%	G type: 160.0% P type: 120.0%	◎
P13.18	Frequency Decrease Rate when Current Limiting	0.00Hz/s ~50.00Hz/s	10.00Hz/s	◎

Overcurrent stall is similar to overvoltage stall, when inverter is in starting acceleration process, then inverter output frequency stop acceleration and keep current running frequency, waiting until output current lower than stall upper limit then starting acceleration. As Fig 6.12-6 showed.

If inverter in constant speed operation, load jump and result in inverter output current exceeding overcurrent stall upper limit, the output frequency of inverter will decrease as P13.18 set and keep decreasing until inverter output current less than P13.17 setting threshold value. As Fig 6.12-6 in constant speed operation:

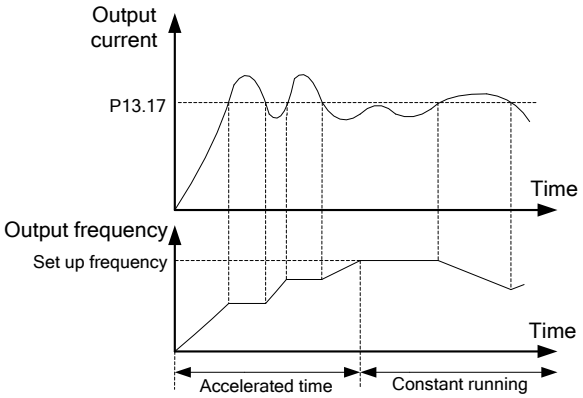

Fig 6.12-6 Diagram for over-current stall protection

P13.19	Phase Loss Protection	0x00~0x11 Led unit's digit: 0: Input phase loss protection disabled 1: Input phase loss protection enabled Led ten's digit: 0: Output phase loss protection disabled 1: Output phase loss protection enabled	Model dependent	○

The above parameter is used to select whether to provide protection for Input or output phase failure. Only the VD series inverter of G model with over 11kW can have input phase loss protection function.

P13.20	Frequency Reduction Function Selection when an Instantaneous Power Failure	0: Disabled 1: Enabled	0	○
P13.21	Frequency Reduction Mode Selection when an Instantaneous Power Failure	0~1	0	○
P13.22	Frequency Decrease Rate when an Instantaneous Power Failure (P13.21=0 Enabled)	0.00Hz/s~50.00Hz/s	10.00Hz/s	○
P13.23	Deceleration Time when an Instantaneous Power Failure (P13.21=1 Enabled)	0.0s~600.0s	5.0s	○
P13.24	Estimate Voltage when an Instantaneous Power Failure	200.0VDC~600.0VDC	380VAC corresponding: 420.0VDC 220VAC corresponding: 240.0VDC	○

This function means that when instant power failure or voltage suddenly drop, inverter output speed will decrease and load feedback energy will compensate to drop of inverter DC bus voltage, in order to keep inverter run and avoid under voltage error caused stopping.

P13.20 is used in selecting protection function in instantaneous power failure, P13.21 is used in frequency reduction mode selection when an instantaneous power: 0 is frequency decrease according to P13.22 frequency decrease rate. When bus voltage is low or instantaneous power failure and P13.20=1, then inverter output frequency will judge and interfere inverter output frequency according to P13.21 selection mode and P13.22 set value, will normal run until bus voltage recovery.

P13.25	Short-circuit to Ground Upon Power-on	0: Enabled 1: Disabled	0	○

To check if motor is short circuit to ground when inverter powered on, if selecting detection enabled, inverter output terminal U, V, W has voltage output after powered on for a short period, it is used to check if motor is short circuit to ground or not.

P13.26	Fault Output Terminals Action Selection during Fault	0x00~0x11 Led unit's digit: 0: Action upon under-voltage error 1: No action upon under-voltage error Led ten's digit: 0: Action during auto reset 1: No action during auto reset	0x00	○

Used to select fault output terminals in the under-voltage and fault automatic reset action.

P13.27	Fault Auto Reset Time	0~20	0	○

When the inverter selects fault auto reset, it is used to set the times of auto reset. If fault times exceeded this parameter value, the inverter will keep error status.

P13.28	Time Interval of Fault Reset	0.1s~3600.0s	1.0s	○

The parameter is used to set the interval time from inverter error alarming to auto reset error. If inverter occurred error within the interval time then inverter will not reset and give alarming.

P13.29	Fan Start Mode	0: Automatic control 1: Fan keep run	0	○

Used to select a cooling fan mode of action, choosing to 0, the run state of the inverter in the fan operation, stop state if the radiator temperature is above 40 degrees fan operation, stop condition radiator temperature below 40 degrees fan doesn't work. This mode can greatly improve the service life of the cooling fan.

Choose to 1, the fan has been run after the inverter to electricity.

P13.30	Automatic Frequency Reduction Selection when Voltage Reduction	0: Disabled 1: Enabled	0	○
P13.31	Automatic Frequency Reduction Point when Voltage Reduction	200.0VDC~600.0VDC	380VAC corresponding: 513.0VDC 220VAC corresponding: 297.0VDC	○

When the voltage drop but the automatic frequency reduction function is effective, the inverter can guarantee the output rated torque when the grid voltage drops to the voltage automatic frequency drop point.

P13.32	Emergency Stop Time	0.0s~3600.0s	5.0s	○

Combination with DI function 24 emergency stop time, decided to stop time.

6.14 P14 Error Record Parameter Group

P14.00	Fault Record Selection	0~3 (0: current fault, 1: Last fault, ID is larger, the earliest failure)	0	○

This parameter is used to select the user needs to check when failure keep records. Note: the bigger the ID number is, the earlier the inverter failure time is.

Error code	Error code description	Error code	Error code description
0	No fault	Er001	Acceleration run overcurrent(hardware)
Er002	Deceleration run overcurrent(hardware)	Er003	Constant speed run overcurrent (hardware)
Er004	Acceleration run overcurrent(software)	Er005	Deceleration run overcurrent (software)
Er006	Constant speed run overcurrent (software)	Er007	Acceleration run overvoltage
Er008	Deceleration run overvoltage	Er009	Constant speed run overvoltage
Er010	Bus under voltage	Er011	Motor overload
Er012	Inverter overload	Er013	Input side phase loss
Er014	Output side phase loss	Er015	Module overheat
Er016	Current over limit fault	Er017	External fault
Er018	Communication fault	Er019	Current detecting circuit fault
Er020	Motor self-learning error	Er021	EEPROM read-write fault
Er022	PID feedback over limit fault	Er023	PID feedback break line fault
Er024	Short circuit to ground upon power on	Er025	Breaking unit fault
Er026	Reserved	Er027	Running time reached
Er028	Power-on time reached	Er029	Offload
Er030	Reserved	Er031	Reserved
Er032	Reserved	Er033	Reserved
Er034	Overheat	Er035	Reserved
Er036	Electronic overload	Er037	Reserved
Er041	User-defined fault 1	Er042	User-defined fault 2
Er043	User-defined fault 3	Er044	User-defined fault 4
Er060	manufacturer defined fault 1	Er061	manufacturer defined fault 2
Er090	Keypad communication fault (keypad CPU error)	Er091	Parameters upload fault (keypad CPU error)
Er092	Parameters download fault (keypad CPU error)		

This parameter is used to display the fault code when user to view the error record. If displaying is 0 that indicates no fault record.

P14.02	Run Frequency upon Fault	0.00hz~650.00Hz	0.00Hz	●
P14.03	Current Upon Fault	0.0a~2000.0A	0.0A	●
P14.04	Output Voltage upon Fault	0v~2000V	0V	●
P14.05	Bus Voltage upon Fault	0.0v~2000.0V	0.0V	●
P14.06	Input Terminal State upon Fault	0x000~0x1FF	0x000	●
P14.07	Output Terminal State upon Fault	0x00~0x1F	0x00	●
P14.08	Inverter Temperate upon Fault	-20.0°c~120.0°C	0.0°C	●
P14.09	Run Time upon Fault	0min~65535min	0min	●
P14.10	Power-On Time upon Fault	0min~65535min	0min	●
P14.11	Accumulative Running Time upon Fault	0h~65535h	0h	●
P14.12	Accumulative Power-On Time upon Fault	0h~65535h	0h	●

6.15 P15 Modbus Communication Parameter Group

P15.00	Communication Protocol Selection	0: Modbus	0	●

This parameter is used to select the inverter serial communication protocol type of communication.

P15.01	Local Address	0: Broadcast address 1~247: Slave address	1	○

When the host is writing data frame, the slave communication address set to 0, as the broadcast address, all the salves from Modbus will accept the frame but slaves without response.

The machine address has uniqueness in the communication network, which is to achieve the basis of point to point communication of HOST pc and inverter.

Note: when you need to read the inverter run data, the slave address cannot be set as 0.

P15.02	Baud Rate	0: 1200bps 1: 2400bps 2: 4800bps 3: 9600bps 4: 19200bps 5: 38400bps 6: 57600bps 7: 115200bps	3	○

This parameter is used to set data transfer rate between the HOST PC and inverter. Note: the HOST pc and inverter set baud rate must be the same, otherwise, the communication can't be done. The bigger the baud rate is, the faster the communication speed is. But it is easy to be interfered by external environment, please choose according to peripheral environment.

P15.03	Data Format	0: No verify（N，8，1），for RTU 1: Even verify（E，8，1）, for RTU 2: Odd verify（O，8，1），for RTU 3: No verify（N，8，2），for RTU 4: Even verify（E，8，2），for RTU 5: Odd verify（O，8，2），for RTU	0	○

This parameter is used to set the communication format between HOST PC and inverter. HOST PC and inverter setting data format must be the same, otherwise, communication cannot be done.

P15.04	Response Delay	0ms~200ms	5ms	○

Response delay time: refers to the interval time from inverter data receipt ends to sending response data to HOST PC. If response delay is less than system disposal time, then response delay take system disposal time as reference, if response delay is longer than system disposal time, then after system disposal of date, then waiting delay until response delay time arriving to send out data to HOST PC.

P15.05	Communication Timeout Detection Time	0.0s: No detection 0.1s~100.0s	0.0s	○

When the function code is set to 0.0 s, communication timeout parameter is Disabled. When the function code set to enabled values, if the interval time between a communication and the next communication beyond the communication timeout, system will be submitted to the communication

failures Er018. Usually, it is set into is disabled. If in the continuous communication system, set this parameter, you can monitor the communication status.

P15.06	Communication Timeout Error Handling	0: Alarm and coast to stop 1: No alarm and continue to run 2: No alarm and stop according to the stop mode(only under the communication control mode) 3: No alarm and stop according to the stop mode (under all control mode)	0	○

When set up the communication timeout detection, this parameter is used to set the inverter action method after communication.

P15.07	Communication Processing Action Selection	0x00~0x11 Led unit's digit: 0: Write with responds 1: Write without responds Led ten's digit: 0: Communication encrypting no limit 1: Communication encrypting with limit	0x00	○

The parameter is used to set whether inverter will response data in communication and whether communication encryption setup is enabled.

Write operation with response: inverter responses data to host PC for read write command.

Write operation with no response: inverter only responses data to host PC read command, no response data to write command, helpful for improving communication efficiency.

Communication encryption setting is disabled: communication is not limited by user password encryption.

Communication encryption setting is enabled: communication is limited by user password encryption.

P15.08	Communication to Modify P00.01 Selection	0: Enable modify 1: Disable modify	1	○

This parameter is used to set up the communication whether to change the run command source.

6.16 P20 Motor 2 Parameter Group

Refer to the detail specification of P02 group motor 1 parameter

6.17 P21 Motor 2 V/F Control Parameter Group

Refer to the detail specification of P04 group motor 1 V/F control parameter group

6.18 P28 Status Monitoring Parameter Group

P28.00	Running Frequency		0.01Hz	●
P28.01	Set Frequency		0.01Hz	●
P28.02	Slope Given Frequency		0.01Hz	●
P28.03	Bus Voltage		0.1V	●
P28.04	Output Voltage		1V	●
P28.05	Output Current		0.1A	●
P28.06	Torque Current		0.1A	●
P28.07	Exciting Current		0.1A	●
P28.08	Output Power Percent		0.1%	●
P28.09	Output Torque		0.1Nm	●
P28.10	Output Torque Percent		0.1%	●
P28.11	Set Torque Percent		0.1%	●
P28.12	Motor Run Speed		1RPM	●
P28.13	Speed Controller Output		0.0%	●
P28.14	DI Input State		1	●
P28.15	DO Input State		1	●
P28.16	AI1 Voltage		0.01V	●
P28.17	AI2 Voltage		0.01V	●
P28.18	AI3 Voltage(Extension Card)		0.01V	●
P28.19	Count Value		1	●
P28.20	Motor Power Factor		0.01	●
P28.21	Magnetic Linkage		0.1%	●
P28.22	PID Setting Value		0.01	●
P28.23	PID Feedback Value		0.01	●
P28.24	PID Output Value		0.1%	●
P28.25	PLC Stage		1	●
P28.26	HS Pulse Input Frequency		0.01kHz	●
P28.27	Current Fault Code		1	●
P28.28	Accumulative Running Time		1h	●

P28.29	Accumulative Power-On Time		1h	●
P28.30	Current Running Time		1min	●
P28.31	Current Power-On Time		1min	●
P28.32	Module Temperature		0.1°C	●
P28.34	Frequency Fine-Tuning		0.01Hz	●
P28.35	AC Input Current		0.1A	●
P28.36	Accumulative Power Consumption Upper Bit		1kwh	●
P28.37	Accumulative Power Consumption Lower Bit		0.1kwh	●
P28.38	Length		1	●
P28.39	Accumulative Running Time		1h	●
P28.40	Torque Compensation		0.0%	●

The above parameters are used to check the inverter input, output, and other users to set the real-time display of function value. Users may have the group function code real-time view, judge the run state of transducer.

6.19 P29 User Parameter Group

P29.00	User Password	0~65535	0	○

Any non-zero number can be set, and then the password protection function will be enabled.

When enter the menu next time, must input password correctly, otherwise can't view and modify the function parameters, please remember setup user password correctly.

Set P29.00 to 0000: Clear the previous setup user password and disable the password protection function.

P29.01	Parameter Initialization	0: No operation 1: Restore factory default setup value 2: Clear the fault record 3: Clear accumulative running and power-on time 4: Date upload (inverter to panel) 5: Date download (panel to inverter)	0	◎

Recover manufacturer parameter: inverter function parameter mostly is recovered to manufacturer parameter, but motor parameter, error record message, accumulate run time, accumulate power-on time are not recovered.

clear error record: clear inverter error record message

clear accumulate run and power-on time: used to clear accumulate run and power-on time of inverter record.

P29.02	Product Code	0~65535	Manufacturer set	●
P29.03	Software Versioning	1.00~10.00	Manufacturer set	●
P29.04	Inverter Rate Power	0.4kW~1000.0kW	Manufacturer set	●
P29.05	Inverter Rate Voltage	220V~1140V	Manufacturer set	●
P29.06	Inverter Rate Current	2.4A~2000.0A	Manufacturer set	●
P29.07	Factory Use			☆
P29.08	Factory Use			☆
P29.09	Factory Use			☆
P29.10	Factory Use			☆
P29.11	Factory Use			☆

Above parameter is used to check over inverter manufacturer setting and inverter critical parameter, only for user to review.

Chapter 7 EMC Guide

7.1 Definition

Electromagnetic compatibility is the ability of the electric equipment to run in the electromagnetic interference environment and implement its function stably without interferences on the electromagnetic environment.

7.2 EMC Standard Introduction

VD300 inverters have pass CE Test and is conformed to the requirements of the standard IEC/EN61800-3: 2004.

IEC/EN61800-3 assesses the inverter in terms of electromagnetic interference and Anti electromagnetic interference. Electromagnetic interference mainly tests the radiation interference, conduction interference and harmonics interference on the inverter (required for the inverter for civil use)Anti-electromagnetic interference mainly tests the conduction immunity, radiation immunity, surge interference immunity, rapid mutation pulse group immunity, ESD immunity and low frequency of power supply immunity.

7.3 EMC Guide

During inverter installation and usage, please comply to details of this chapter, in general industry environment it has good electromagnetic compatibility.

7.3.1 Harmonic Effect:

Higher harmonics of power supply may damage the inverter. Thus, at some places where power quality is rather poor, it is recommended to install AC input reactor.

7.3.2 Electromagnetic Interference and Installation Precautions

There are two kinds of electromagnetic interferences, one is interference of electromagnetic noise in the surrounding environment on the inverter, and the other is interference of inverter on the surrounding equipment.

Installation precautions:

1) The earth wires of the inverter and other electric products shall be well grounded;

2) The power input and output power cables of the inverter and weak current signal cables (e.g. control line) shall not be arranged in parallel and vertical arrangement is preferable.

3) It is recommended that the output power cables of the inverter employ shield cables or steel pipe shielded cables and that the shielding layer be earthed reliably. The lead cables of the equipment suffering interferences are recommended to employ twisted-pair shielded control cables, and the shielding layer shall be earthed reliably.

4) When the length of motor cable is longer than 100 meters, it needs to install output filter or reactor.

7.3.3 Handling Method for the Interferences of the Surrounding Equipment on the Inverter

The electromagnetic interference on the inverter is generated because plenty of relays, contactors and electromagnetic braking are installed near the inverter. When the inverter has error action due to the interferences, the following measures can be taken:

1) Install surge suppressor on the devices generating interference;

2) Install filter at the input end of the inverter. Refer to Section 7.3.6 for the specific operations.

3) The lead cables of the control signal cable of the inverter and the detection line employ shielded cable and the shielding layer shall be earthed reliably.

7.3.4 Handling Method for the Interferences of Inverter on the Surrounding Equipment

These interferences include two types: one is radiation interference of the inverter, and the other is conduction interference of the inverter. These two types of interferences cause the surrounding electric equipment to suffer electromagnetic or electrostatic induction. The surrounding equipment hereby produces error action. For different interferences, it can be handled by referring to the following methods:

1) For the measuring meters, receivers and sensors, their signals are generally weak. If they are

placed nearby the inverter or together with the inverter in the same control cabinet, they are easy to suffer interference and thus generate error actions. It is recommended to handle with the following methods: Put in places far away from the interference source; do not arrange the signal cables with the power cables in parallel and never bind them together; both the signal cables and power cables employ shielded cables and are well earthed; install ferrite magnetic ring (with suppressing frequency of 30 to 1, 000MHz) at the output side of the inverter and wind it 2 to 3 cycles; install EMC output filter in bad conditions;

2) When the equipment suffering interferences and the inverter use the same power supply, it may cause conduction interference. If the above methods cannot remove the interference, it shall install EMC filter between the inverter and the power supply (refer to Section for the prototyping operation);

3) The surrounding equipment is separately earthed, which can avoid the interference caused by the leakage current of the inverter's earth wire when common earth mode is adopted.

7.3.5 Leakage Current and Disposal

Inverter leakage current has two types: one is to ground leakage current, one is line-to-line leakage current.

1) The factors of affecting to ground leakage current and solution:

the conducting cable and earth has distributed capacitance, the bigger the capacitance is, the bigger the leakage current is, so by effectively shorten the distance between motor and inverter can reduce distributed capacitance. The bigger the carrier frequency is, the bigger the leakage current is. By reducing carrier frequency to reduce leakage current, but reducing carrier frequency will result in motor noise increasing. Please pay attention: add electric reactor is also an effective way to solve leakage current. The leakage current will increase as the increase of loop circuit current. So if motor power is big, the corresponding leakage current is big.

2) The factors resulting in line-to-line leakage current and solution:

There is distributed capacitance among inverter output wirings, if the passing current has higher harmonic, it may result in resonance and bring leakage current. If using thermal relay might result in wrong action. The solution is to reduce carrier frequency or add output electric reactor. In application, it is not recommended to add thermal relay between motor and inverter, but to use inverter electronic overcurrent protection function.

7.3.6 Notice for Power Input Side adding EMC Input Filter

WARNING

● When using the filter, please follow its rated values strictly. Since the filter belongs to Classification I electric appliances, the metal enclosure of the filter shall be large and the metal ground of the installing cabinet shall be well earthed and have good conduction continuity. Otherwise there may be danger of electric shock and the EMC effect may be greatly affected.

● Through the EMC test, it is found that the filter ground must be connected with the PE end of the inverter at the same public earth. Otherwise the EMC effect may be greatly affected.

● The filter shall be installed at a place close to the input end of the power supply as much as possible.

Chapter 8 Fault Shooting and Solutions

8.1 Fault Alarm and Countermeasures

VD300 inverter has warning information and fault protection function. In case of abnormal fault, the inverter error relay contactor will be in action, before user seeking for help, please do self-inspection according to this chapter to analyze causes and find out solution. If user cannot solve problem by himself, seeking for help or directly contact your local dealer or our company.

VD300 inverter during running process or powered on, if fault occurred, on the display of panel of inverter will show error code. At the moment inverter already have protection effectively to the fault, output terminal stopped output, the display panel has indicating current error with 2~5 code.

Inverter keypad displayer has showing error code when in error, the code content and corrective action as below table.

Code	Error Type	Possible Error Causes	Solution
Er001	Acceleration run over-current (hardware)	1: Acceleration time is too short 2: Motor parameter is not correct 3: Grid voltage is too low 4: Inverter power is too small 5: V/F curve inappropriate 6: Inverse module short circuit protection	1: Extend acceleration time 2: Self-tuning of motor parameter 3: Check grid input power 4: Select inverter with bigger power class 5: Adjust V/F curve setting, adjust manual torque boost 6: Inverter module or drive circuit damage
Er002	Deceleration run over-current (hardware)	1: Deceleration time is too short 2: load inertia torque is too big 3: Inverter power is too small 4: Inverse module short circuit protection	1: Extend deceleration time 2: Add external energy consumption braking unit 3: Choose inverter with bigger class power 4: Inverse module or drive circuit damage
Er003	Constant speed run over-current (hardware)	1: Load with jump or abnormal 2: Grid voltage is too low 3: Inverter power is too small 4: Inverse module short circuit protection	1: Check load or reduce load jumping 2: Check grid input power 3: Choose inverter with bigger class power 4: Inverse module or drive circuit damage
Er004	Acceleration run over-current (software)	1: Acceleration time is too short 2: Motor parameter is not correct 3: Grid voltage is too low 4: Inverter power is too small 5: V/F curve inappropriate	1: Extend acceleration time 2: Self-tuning of motor parameter 3: Check grid input power 4: Select inverter with bigger power class 5: Adjust V/F curve setting, adjust manual torque boost

Er005	Deceleration run over-current (software)	1: Deceleration time is too short 2: Load inertia torque is too big 3: Inverter power is too small	1: Extend deceleration time 2: Add external energy consumption braking unit 3: Choose inverter with bigger class power
Er006	Constant speed run over-current (software)	1: Load with jump or abnormal 2: Grid voltage is too low 3: Inverter power is too small	1: Check load or reduce load jumping 2: Check grid input power 3: Choose inverter with bigger class power
Er007	Acceleration run over-voltage	1: Input voltage abnormal 2: Restart motor in rotating after instant power off	1: Check grid input power 2: Avoid stop and restart
Er008	Deceleration run over-voltage	1: Deceleration time is too short 2: Load inertia torque is too big 3: Input voltage abnormal	1: Extend Deceleration time 2: Increase energy consumption braking unit 3: Check grid input power
Er009	Constant speed run over-voltage	1: Input voltage abnormal 2: Input voltage with abnormal change 3: Load inertia is too big	1: Check grid input power 2: Install input electric reactor 3: Add external energy consumption braking unit
Er010	Bus under-voltage	1: Grid voltage two low 2: Instant power off	1: Check grid input power 2: RESET operation
Er011	Motor overload	1: Grid voltage is too low 2: Motor rate current setting un-correct 3: Motor stalled for load jump is too big	1: Check grid voltage 2: Reset setting motor rate current 3: Check load, adjust torque boost quantity
Er012	Inverter overload	1: Acceleration is too quick 2: Restart motor in rotating 3: Grid voltage is too low 4: Load is too big	1: Increase acceleration time 2: Avoid stop and restart 3: Check grid voltage 4: Choose bigger power inverter
Er013	Phase loss at input side	Phase loss with input R, S, T	1: Check grid input power 2: Check installation wring
Er014	Phase loss at output side	1: U, V, W output phase loss 2: Load 3phase seriously unbalance	1: Check output wiring 2: Check motor and cable
Er015	Inverse module overheat	1: Inverter instant over current 2: Output 3phase with interphase or short circuit to ground 3: Air channel stalled or fan	1: Refer to overcurrent solution 2: Re-wiring 3: Clear fan channel or change fan 4: Reduce environment temperature 5: Check and re-connect

		damaged 4: Environment temperature high 5: Control board connection or plug in loose 6: Auxiliary power damage, drive voltage under-voltage 7: Power module with bridge arm straight 8: Control board abnormal	6: Seek for help 7: Seek for help 8: Seek for help
Er016	Current over limit error in run	Setting of Current over limit value is small	Check P13.09~P13.11 setting
Er017	External error	DI external error input terminal act	Check external device input
Er018	Communication error	1: Baud rate setting inappropriate 2: Adopt serious communication error 3: Communication break up for long time	1: Set appropriate baud rate 2: Press STOP/RST key to reset, seek help 3: Check communication interface wiring
Er019	Current detecting circuit error	1: Control board connector with bad connection 2: Auxiliary power damage 3: Hall device damage 4: Amplify circuit abnormal	1: Check connector, re-wring 2: Seek for help 3: Seek for help 4: Seek for help
Er020	Motor self-learning error	1: Motor and inverter capacity is not match 2: Motor rate parameter setting inappropriate 3: Self-learning parameter and standard parameter deviation is too big 4: Self-learning overtime	1: Change inverter model 2: Set rate parameter according to motor nameplate 3: Make motor empty load, re-identify 4: Check motor wire connection, parameter setting
Er021	EEPROM write-read error	1: Write-read error of the control parameter 2: EEPROM damage	1: Press STOP/RST key to reset, seek for help 2: Seek for help
Er022	PID feedback over limit error in run	Feedback exceeding setting upper limit	Check if feedback source device is abnormal
Er023	PID feedback break line error	1: PID feedback break line 2: PID feedback source lost	1: Check PID feedback signal 2: Check PID feedback source
Er024	Motor short circuit to ground	One phase short circuit to ground (U, V, W)	Check output 3phase to ground conductance, eliminate error

Er027	Run time arrival	Setting run time arrival	Use parameter initial function to clear record message
Er028	Power-on time arrival	Set up power-on time arrival	Use parameter initial function to clear record message
Er029	Offload	Inverter run current is smaller than setting value	Confirm if load has broken away or parameter setting is appropriate for actual condition
Er034	Motor overheat	1: Temperature sensor connection loosen 2: Motor temperature high	1: Check temperature sensor connection and eliminate error 2: Reduce carrier or take other measurement to cool down motor
Er036	Electronic overload	Inverter take overload protection according to set value	1: Check load 2: Reset overload pre-alarm parameter
Er041	User self-define error 1	User self-define error 1 signal input terminal enabled	1: Check the signal source 2: Eliminate signal action source
Er042	User self-define error 2	User self-define error 2 signal input terminal enabled	1: Check the signal source 2: Eliminate signal action source
Er043	User self-define error 3	User self-define error 3 signal input terminal enabled	1: Check the signal source 2: Eliminate signal action source
Er044	User self-define error 4	User self-define error 4 signal input terminal enabled	1: Check the signal source 2: Eliminate signal action source
Er060	Manufacturer self-define Error 1	Manufacturer inside use error code	Seek for help
Er061	Manufacturer self-define Error 2	Manufacturer inside use error code	Seek for help
Er090	Keypad communication error (keypad CPU error)	1. Display panel connection cable loose 2. CPU display panel damaged	1. Check the connection cable 2. Seeking service
Er091	Parameters upload error(keypad CPU error)	1. Display panel connection cable loose 2. CPU display panel damaged	1. Check the connection cable 2. Seeking service
Er092	Parameters download error(keypad CPU error)	1. Display panel connection cable loose 2. CPU display panel damaged	1. Check the connection cable 2. Seeking service

8.2 Common Faults and Solutions

8.2.1 No Display after Power on

Use multi-meter to check inverter input power to see if it is in accordance with inverter rated voltage. If power voltage factor is eliminated, then check 3phase rectifier bridge is okay. If rectifier bridge has exploded, please ask for help.

Check the CHARGE light on. If the light is off, the fault is mainly in the rectify bridge or the buffer resistor. If the light is on, the fault may be lies in the switchover power supply. Please ask for support.

8.2.2 Power Supply Air Switchover Trips off when Power on

Inspect whether the input power supply is grounded or short circuit. Please solve the problem. Inspect whether the rectify bridge has been burnt or not. If it is damaged, ask for support.

8.2.3 Motor doesn’t Move after Inverter Run

Inspect if there is balanced three-phase output among U, V, W. If yes, then motor could be damaged, or mechanically locked. Please solve it. If the output is unbalanced or lost, the inverter drive board or the output module may be damaged, ask for support..

8.2.4 Inverter Displays Normally when Power on, but Switchover at the Input Side Trips when Run

①Inspect whether the output side of inverter is short circuit. If yes, ask for support.

②Inspect whether ground fault exists. If yes, solve it.

③If trip happens occasionally and the distance between motor and inverter is too far, it is recommended to install output AC reactor.

④If inverter in normal protection, after eliminating error, press STOP/RESET key to reset error, then restart inverter.

⑤After eliminating error, inverter power supply shut down, wait until LED display light off, then restart inverter.

⑥If above steps cannot get inverter back to normal usage, then take note of the error code displayed, and inverter specification, product number, then contact the manufacturer.

Chapter 9 Communication Protocol

VD300 series inverter provides RS485 communication interface, and adopts Modbus-RTU communication protocol. User can carry out centralized monitoring through PC/PLC to get operating requirements.

9.1 About Protocol

This Modbus serial communication protocol defines the frame content of asynchronous transmission information and use format in the series communication and it includes master-polling (or broadcast address) executive command, data and error checking. The response of slave is the same structure, and it includes action confirmation, returning the data and error checking etc. If slave takes place the error while it is receiving the information or cannot finish the action demanded by master, it will send one fault signal to master as a response.

9.2 Application Methods

VD300 series inverter will be connected into a “Single-master Multi-slave” control net with RS485 bus.

9.3 Bus Structure

(1) Interface mode: RS485 Hardware interface.

(2) Transmission mode:

There provide asynchronous series and half-duplex transmission mode. At the same time, just one can send the data and the other only receives the data between master and slave. In the series asynchronous communication, the data is sent out frame by frame in the form of message.

(3) Topological mode:

In Single-master system, the setup range of slave address is 0 to 247. Zero refers to broadcast communication address. The address of slave must is exclusive in the network. That is the basis to guarantee the Modbus serial communication.

9.4 Protocol Description

VD300 series inverter communication protocol is a kind of serial master-slave communication protocol, in the network, only one equipment (master) can build a protocol, (Named as “Inquire/Command”). Other equipment (slave) only by providing the data response “Inquire/Command” or doing the action according to the master’s “Inquiry/Command”. Here, master is personnel computer (PC), industrial control machine or programmable logical controller(PLC) etc., and the slave is inverter. Master not only visits some slave, but also sends the broadcast information to all the slaves. For the single master “Inquiry/Command”, all of slaves will return a signal that is a response; for the broadcast information provided by master, slave needs not feedback a response to master machine.

9.5 Communication Frame Structure

Modbus protocol communication frame format of VD300 series of inverter is shown as following: (In RTU mode, messages start with a interval of at least 3.5 character times. This is most easily implemented as a multiple of character times at the baud rate that is being used on the network. (shown as T1-T2-T3-T4 in the figure below). The first field then transmitted is the device address. The allowable characters transmitted for all fields are hexadecimal 0 ... 9, A ... F. Networked devices monitor the network bus continuously, including during the silent intervals.

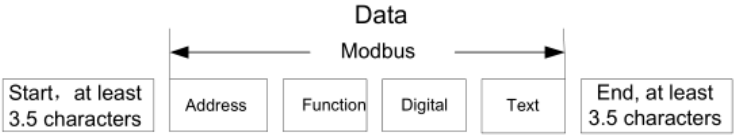

When the first field (the address field) is received, each device decodes it to find out if it is the addressed device. Following the last transmitted character, a similar interval of at least 3.5 character times marks the end of the message. A new message can begin after this interval) The entire

message frame must be transmitted as a continuous stream. If a silent interval of more than 1.5 character times occurs before completion of the frame, the receiving device flushes the incomplete message and assumes that the next byte will be the address field of a new message. Similarly, if a new message begins earlier than 3.5-character times following a previous message, the receiving device will consider it a continuation of the previous message. This will set an error, as the value in the final CRC field will not be Enabled for the combined messages. A typical message frame is shown below.

Frame header START	T1-T2-T3-T4(3.5 bits transmission time)
Slave address field ADDR	Communication address: 0~247(decimal) (0 as broadcast address)
Function field CMD	03H: read slave parameter 06H: write slave parameter
Data field DATA(N-1)…DATA(0)	2*N bit data: this part is the main content of communication, also as the core of data exchange in communication
CRC CHK low bit	Detect value: CRC verify bit (16bit)
CRC CHK high bit	T1-T2-T3-T4(3.5 bits transmission time)
Frame footer END	
END Lo	

9.6 Command Code and Communication Data Description

9.6.1 Command code: 03H (0000 0011), reads N words. (There are 16characters can be read at the most.)

For example: the inverter slave address is 01H, memory start address is 3200H (output frequency address), read 5bits continuously (output frequency, set frequency, motor run speed, bus voltage, output current total 5 data of run parameter), the frame of structure as below:

RTU master command message

START	T1-T2-T3-T4
ADDR	01H
CMD	03H
Start address high bit	32H
Start address low bit	00H
Data bit high bit	00H
Data bit low bit	05H
CRC CHK low bit	8BH
CRC CHK high bit	71H
END	T1-T2-T3-T4

RTU Master command information

START	T1-T2-T3-T4
ADDR	01H

CMD	03H
Bit number	10H
Output frequency high bit	xx H
Output frequency low bit	xx H
Setting frequency high bit	xx H
Setting frequency low bit	xx H
Motor run speed high bit	xx H
Motor run speed low bit	xx H
Bus voltage high bit	xx H
Bus voltage low bit	xx H
Output frequency high bit	xx H
Output frequency low bit	xx H
CRC CHK low bit	xx H
CRC CHK high bit	xx H
END	T1-T2-T3-T4

9.6.2 Command Code: 06H (0000 0110), write one word

Such as: Put 5000(1388H) (namely write-in setting frequency 50.00Hz) write to slave address 01H inverter 3001H (communication set frequency address). The frame structure description as below:

RTU Master command information.

START	T1-T2-T3-T4
ADDR	01H
CMD	06H
Write data address high bit	30H
Write data address low bit	01H
Data content high bit	13H
Data content low bit	88H
CRC CHK low bit	DAH
CRC CHK high bit	5CH
END	T1-T2-T3-T4

RTU slave response information.

START	T1-T2-T3-T4
ADDR	01H
CMD	06H

Write data address high bit	30H
Write data address low bit	01H
Data content high bit	13H
Data content low bit	88H
CRC CHK low bit	DAH
CRC CHK high bit	5CH
END	T1-T2-T3-T4

9.6.3 Communication Format Error Check Method

Frame error check mode includes two part verification, bit check of byte (odd/even verify) and CRC check of complete data of format.

9.6.3.1 Byte check

User can select different check mode according to requirement, can also select no-check, but it will affect the bit setting of every byte check.

Even parity check: add a bit of even parity check before data transmission, to express the number of “1” in the transmission data is odd or even, if the number is even, check bit is “0”, otherwise it “1”. This is to Keeping the parity of the data unchanged.

Odd parity check: add a bit of odd parity check before data transmission, to express the number of “1” in the transmission data is odd or even, if the number is odd, check bit is “0”, otherwise it “1”. This is to Keeping the parity of the data unchanged.

For example, the transmitting data “11001110”, there is 5 “1” in the data, if using even parity check, the even check bit is “1”, if using odd parity check, the odd check bit is “0”, when transmitting, the parity check bit will be processed and put at the position of format check bit. And the receiving device will also do parity check, if it found the parity of the received data is not the same as pre-set, then it decides that communication was in error.

9.6.3.2 CRC check method

In RTU frame format, format include format error-checking field that is based on CRC method calculation. The CRC field checks the contents of the entire format. The CRC field has two bytes , containing a 16-bit binary value. The CRC value is calculated by the transmitting device, which adds the CRC to the format. The receiving device recalculates the received CRC format, and compares the value of CRC field received, if the two value of CRC is not equal, then there is error in transmission.

The CRC saves 0xFFFF at first, then call a process to deal with the successive 6 bytes of the format and the value of present register. Only the 8bit data of each byte is enabled for CRC, the starting bit and the end bit and parity check bit is all disabled.

During generation of the CRC, each eight-bit character is separately do XOR with the register contents, the results is shifting towards the lowest Enabled bit, the highest Enabled bit is filled with 0. LSB is extracted to be checked, if LSB is 1, the register will be separately do XOR with pre-set value; if LSB is 0, then no need. The complete process will be repeated for 8times. After completing of the last bit (the 8th bit), the next 8bit byte will be separately XOR with present register value. The final value of register is the CRC value of the all bit executed of the frame.

The calculation of CRC, adopting the international standard CRC check regulation, when user is editing CRC calculation, can refer to related CRC calculation.

Here providing a CRC calculation simple function for user reference.

```
unsigned int crc_cal_value(unsigned char *data_value，unsigned char data_length)
{
int i；
```

```
unsigned int crc_value=0xffff;  while(data_length--)
{
crc_value^=*data_value++;
for(i=0;i<8;i++)
{
if(crc_value&0x0001)
crc_value=(crc_value>>1)^0xa001;
else
crc_value=crc_value>>1;
}
}
return(crc_value);
}
```

In logic ladder, CKSM calculates CRC value according to frame content, adopting table look-up method, this method is simple in program, quick calculating speed, but with big occupying ROM space. Please consider carefully in application with requirement on program space.

9.6.4 Communication Data Address Definition

The part is address definition of communication data, used to control inverter operating, acquiring inverter status message and inverter related function parameter setup etc.

① The rules of parameter address of the function codes

Take sequence number of function code as parameter corresponding to register address, but need to be transferred into hexadecimal. Such as P05.11, the hexadecimal communication address is 050BH, P13.22 hexadecimal communication address is 0D16H.

Note: P30 group is manufacturer setting parameter, it cannot be read or changed. Some parameter cannot be changed when inverter is in operation, but some parameter cannot be changed no matter if inverter is run or not. When changing function code parameter, pay attention to the parameter setting range, unit and related illustration.

Furthermore, since EEPROM is saved frequently, thus will it reducing lifetime. For user, some function code under communication mode is not needed to be saved, only by changing the value of RAM can meet application requirement. In order to realize the function, getting the corresponding upper address of function code add with 80H(64 expressed in hexadecimal). For example, write function code P11.02 is needed to be saved to EEPROM, then set the address as 0B02H, then only change the RAM value and no need to be saved to EEPROM, by setting the address as 8B02H which only used in writing RAM not used in read function, reading this address is Disabled.

② Other function address description:

Function	Address Definition	Date Description	R/W Property
Communication control order	30000H	0.01H: Forward rotation	R/W
		0.002H: Reverse rotation	
		0.003H: Stop	
		0.004H: Coast to stop	
		0.005H: Fault reset	
		0.006H: Forward jog	

		0.007H: Reverse jog			
		0.008H: Jog stop			
		0.009H: Emergency stop			
Communication set value address	3001H	Communication set frequency (0~P0.07, Unit: 0.01Hz)			R/W
	3002H	Torque set value (-3000~3000, 1000 corresponding to 100.0% motor rated current)			
	3003H	The upper limit torque of motor torque (0~3000, 1000 corresponding to 100% inverter motor current)			
	3004H	Braking torque upper limit torque (0~3000, 1000 corresponding to 100% motor rated current)			
	3005H	The upper limit frequency set value of forward rotation (0~P00.07, Unit: 0.01Hz)			
	3006H	The upper limit frequency set value of reverse rotation (0~P00.07, Unit: 0.01Hz)			
	3007H	PID setting, range (0~1000, 1000 corresponding to 100%)			
	3008H	PID feedback, range (0~1000, 1000 corresponding to 100%)			
	3009H	Special control command byte			
		Bit	Value 0	Value 1	
		Bit0 (when bit1=0)	Motor 1	Motor 2	
		Bit2	No action	Torque control Disabled	
		Bit3	No action	Pre-excitation	
		Bit4	No action	DC braking	
	300AH	Voltage set value (special for V/F separation use) (0~1000, 1000 corresponding to 100% motor rated current)			
	300BH	Virtual input terminal command, range: 0x000~0x1FF			
	300CH	Virtual output terminal command, range: 0x000~0x1F			
	300DH	AO output set value 1 (-1000~1000, 1000 corresponding to 100%)			
	300EH	AO output set value 2 (-1000~1000, 1000 corresponding to 100%)			
	300FH	PID feed forward value (-1000~1000, 1000			

		corresponding to 100%)			
Inverter status byte 1	3100H	0.01H: Forward rotation			R
		0.002H: Reverse rotation			
		0.003H: Inverter stopping			
		0.004H: Inverter at fault			
		0.005H: Inverter at POFF state			
		0.006H: Inverter at Pre-excitation state			
Inverter status byte 2	3101H	Special control command byte			W
		Bit	0	1	
		Bit0 (when bit1=0)	Motor 1	Motor 2	
		Bit2	Ready for running	Ready for running	
		Bit3	Motor with excitation	Motor with excitation	
		Bit4	Un-overload pre-alarm	overload pre-alarm	
Error code	3102H	Refer to error type description			R
Product code	3103H				R
Output frequency	3200H	0.00Hz~P00.07			R
Set frequency	3201H	0.00Hz~P00.07			R
Motor running speed	3202H	0RPM~65535RPM			R
BUS voltage	3203H	0.0V~2000.0V			R
Output current	3204H	0.0A~2000.0A			R
Output voltage	3205H	0V~1200V			R
Set torque	3206H	-250.0%~250.0%			R
Output torque	3207H	-250.0%~250.0%			R
Output power	3208H	-300.0%~300.0%			R
Input terminal state	3209H	0x0000~0x003F			R
Output terminal state	320AH	0x0000~0x000F			R
PID set value	320BH	-100.0%~100.0%			R
PID feedback value	320CH	-100.0%~100.0%			R
AI1 input value	320DH	0.00V~10.00V			R

AI2 input value	320EH	0.00V~10.00V	R
AI3 input value	320FH	0.00V~10.00V	R
HS pulse input frequency	3210H	0.00kHz~100.00kHz	R
Count value	3211H	0~65535	R
MS speed present stage	3212H	0~15	R
Password verify	4000H	0~65535	W

9.6.5 Inverter Response when Communication in Error

In communication control, if communication operation command is in discrepancy (such as read-only address to deal with write operation command), or communication operating address is in discrepancy (such as the address is not existed or the address doesn't enabled user operating); or operand is in discrepancy(such as operand exceeding the setting range or operation communication continuously reading, inverter continuous address quantity less than communication read of address number). At this stage, inverter will return error message to HOST pc on real-time for reminding communication error.

When inverter response to HOST pc, it use function code and error code to indicate if communication operation is normal or abnormal. For normal response, inverter returns back a corresponding function code and data address or sub-function code; for communication operation abnormal response, inverter returned normal operation code with the highest bit setting as "1", such as read command 03H, abnormal response as 83H; and write command 06H with its abnormal response as 86H. It follows the error message code and CRC check code.

Communication error code is the response from inverter sent to HOST pc, its code and meaning as below table:

Code	Description	Meaning
01H	Illegal command	Command sent is illegal
02H	Illegal data address	The register address sent to inverter is illegal or un-defined
03H	Illegal data value	Inverter received data value exceeding enabled range
04H	Operation failure	Setting parameter in write operation is disabled setting
05H	Password error	User password checking is not pass
06H	Data frame error	The frame message sent from HOST pc, the length of data frame is not correct, or RTU format CRC checking error.
07H	Parameter read only	Write operation for read-only parameter
08H	Parameter run and cannot be changed	HOST pc change the parameters which cannot be changed when inverter is run.
09H	Password protection	HOST pc is reading or writing without password unlock.

When communication controls inverter, if communication operation is normal, the data returned from inverter in sequence order as inverter communication address, operation command byte, parameter

address, parameter data and CRC checking. Such as the 3000H of number 01 inverter address, write in data is 1; then communication command is: 010630000001470A, and inverter returned data as: 010630000001470A。If change the write in data to 09H, then communication command is:

01063000000946CC, and inverter returned data as: 01860443A3. And the returned data 86H stands for wrong write-in command, 04H is communication error code stands for operation failure, because for 3000H address, the max write-in number is 09H, exceeding its setting range.

9.6.6 Continuous Communication Data Address Parameter Read Description

VD300 series inverter supports max 16 numbers continuous address parameter data reading, communication reading only need randomly designating starting address and the data byte numbers from starting address. Such as reading motor run frequency when inverter is run, reading motor run speed, output current, then communication parameter starting address is 3200H, reading data byte number is 0005H, inverter returned run data numbered 1, 3, 5 in sequence as motor running frequency, motor run speed, output current.

Appendix A Multi-function I/O Extension Card

VD300 series inverter support multi-function I/O extension card. There have 3 DI input terminal, 1 DO output terminal and 1 AI input terminal in multi-function I/O extension card. Multi-function extension card and installation diagram as show below:

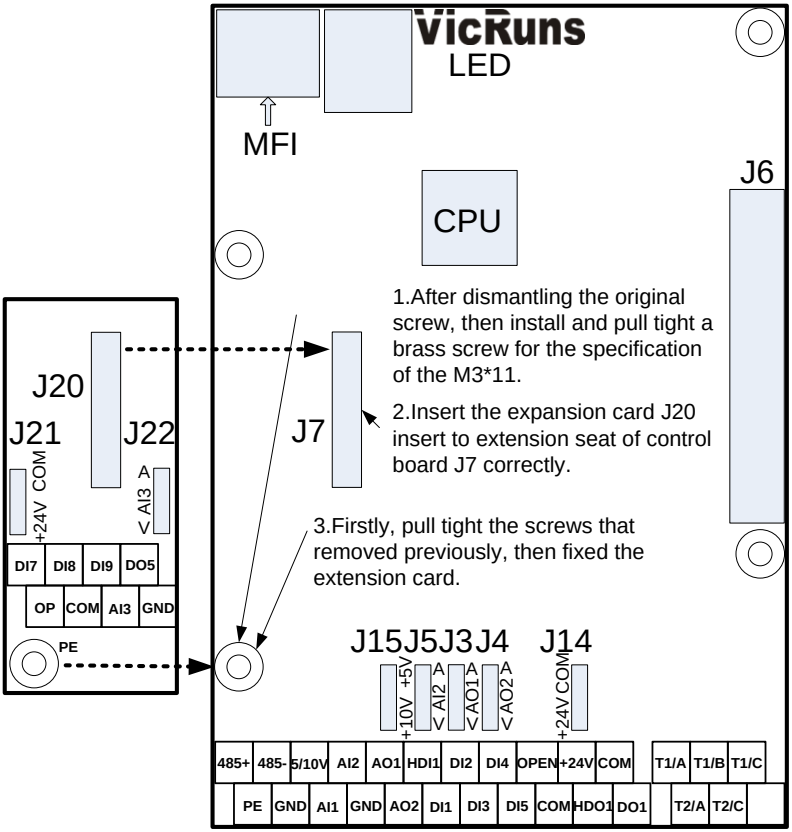

Fig A-1 Multi-function extension card and installation diagram

A.1 The Installation Considerations of Multi-function Extension Card

Please pay attention to the extension card J20 and main control board J7 will strictly correspond to insert when multi-function I/O extension card installed to VD300 main control board, can't dislocation or insert is not tight and result in poor contact.

A.2 Socket Function Description

Table A-1 Socket function description

Socket Code	Function	Function Description
J20	Multi-function I/O extension card – control board	J20 is connection port of main control board and power board, control board supply power to multi-function I/O extension card and is electric signal gateway between the 2 parts.

A.3 Jumper Switchover Function Description

Table A-2 Socket connection function description

Jumper Switchover Code	Jump Selection	Function Description
J21	24V port	When jump cap plug connect to 24V, OP terminal connect with +24V, and DI7 ~DI9 with COM short circuit input effective.
	COM port	When jump cap plug connect to 24V, OP terminal connect with COM, and DI7~DI9 with +24V short circuit input effective.
J22	A port	When jump cap plug connect to A port, AI3 terminal select DC0/4mA-20mA current signal input.
	V port	When jump cap plug connect to V port, AI3 terminal select DC0V-10V voltage input.

Warranty Agreement

1. The warranty period of the product is 18 months from date of manufacturing. During the warranty period, if the product fails or is damaged under the condition of normal use by following the instructions, Vicruns will be responsible for free maintenance.

2. Within the warranty period, maintenance will be charged for the damages caused by the following reasons:

A. Improper use or repair/modification without prior permission;

B. Fire, flood, abnormal voltage, other disasters and secondary disaster;

C. Hardware damage caused by dropping or transportation after procurement;

D. Improper operation;

E. Trouble out of the equipment (for example, external device).

3. If there is any failure or damage to the product, please correctly fill out the Product Warranty Card in detail.

4. The maintenance fee is charged according to the latest Maintenance Price List of Vicruns.

5. The product Warranty Card is not re-issued. Please keep the card and present it to the maintenance personnel when asking for maintenance.

6. If there is any problem during the service, contact Vicruns's agent of Vicruns directly.

7. This agreement shall be interpreted by Hunan Vicruns Electric Technology Co., Ltd.

Vicruns Electric (Shenzhen) Co., Ltd.

25th Building, Xili Industrial Zone, Xiangguang Road, Nanshan District, Shenzhen, China

Tel: +86-755-26638560 Fax: +86-755-26639560

Hunan Vicruns Electric Technology Co., Ltd.

Vicruns Science Park, No.6 Shuangma Road, National High-Tech Industrial Development Zone, Xiangtan, Hunan, China

Tel: +86-731-55573999 Fax: +86-731-55571777

Mobile: +86-18674361497 Email: xiangxy@vicruns.com

VicRuns®

Inverter Warranty Card

Customer Information	Company Name					
	Address				Post Code	
	Contact Person		Tel		Fax	
Model No:						
Bar Code						
Agent Name						
Agent Contact Person			Tel		Fax	
Application of Equipment/Occasion						
Motor Model、Power、Rotate Speed etc Parameter						
Failure Description						
Comment From Customer Service Center						
Maintenance Content and Time						
Remark						

VicRuns®

Product Warranty Card

<table>
<tr><td rowspan="3">Customer Information</td><td colspan="2">Address:</td></tr>
<tr><td rowspan="2">Company Name:

Postcode:</td><td>Contact Person:</td></tr>
<tr><td>Tel of Email:</td></tr>
<tr><td rowspan="3">Product Information</td><td colspan="2">Product Model:</td></tr>
<tr><td colspan="2">Serial No:</td></tr>
<tr><td colspan="2">Name of supplier who supplied you the unit:</td></tr>
<tr><td>Failure Description
(eg. Fault code)</td><td colspan="2">Maintenance Personnel:</td></tr>
</table>